Mad Catz Product Guide

Mad Catz® Street Fighter® V FightPad™ PRO for PlayStation®4 & PlayStation®3

FIGHTPAD PRO

03-10-2016

Rise Up to the Challenge!

Mad Catz' official *Street Fighter V* FightPad PRO delivers precision control over your entire arsenal of moves.

Kick, punch, grapple, and fireball your way to victory with the tournament-ready FightPad PRO. Built for fighting gamers to wreak havoc on the opposition, this Street Fighter controller puts complete character control in the palm of your hand. Execute precise combos with a genuine six-button arcade layout anchored by a fighting-style D-Pad and multi-purpose analog stick.

Certain fighters prefer dishing out beatdowns with a controller's D-Pad while others prefer the feel of an analog stick. Either way, FightPad PRO has your back. And if you're in the latter camp, you can use a handy switch that enables the stick to emulate your choice of left or right stick on a traditional gamepad.

Product Features

- **New Touchpad Controls:** Touch, press, and swipe with full touchpad functionality for PlayStation 4 systems. You can play all PS4 touchpad-enhanced fighting games with this PS4 controller
- **Enhanced Fighting-Style D-Pad:** Easily pull off circular and direct motions. A true brawler's D-Pad helps unleash frantic combos with utmost precision.
- **Versatile Character Movement:** FightPad PRO has you covered whether you prefer a D-Pad or analog stick. Dual-purpose switch lets stick work as left or right analog to give you more control and gameplay options.
- **6-Button Arcade Layout:** Street Fighter controller with arcade-style design featuring 6 action buttons to drain your enemy's life bar.
- **Fits All Play Styles:** Flip a switch to swap functionality of triggers and shoulder buttons. Play with a traditional top button layout, or access all 8 action buttons with your right hand.

Product Includes

- *Street Fighter® V* Arcade FightPad™ PRO with 9.8ft/3m USB Connector Cable

Available in four designs:

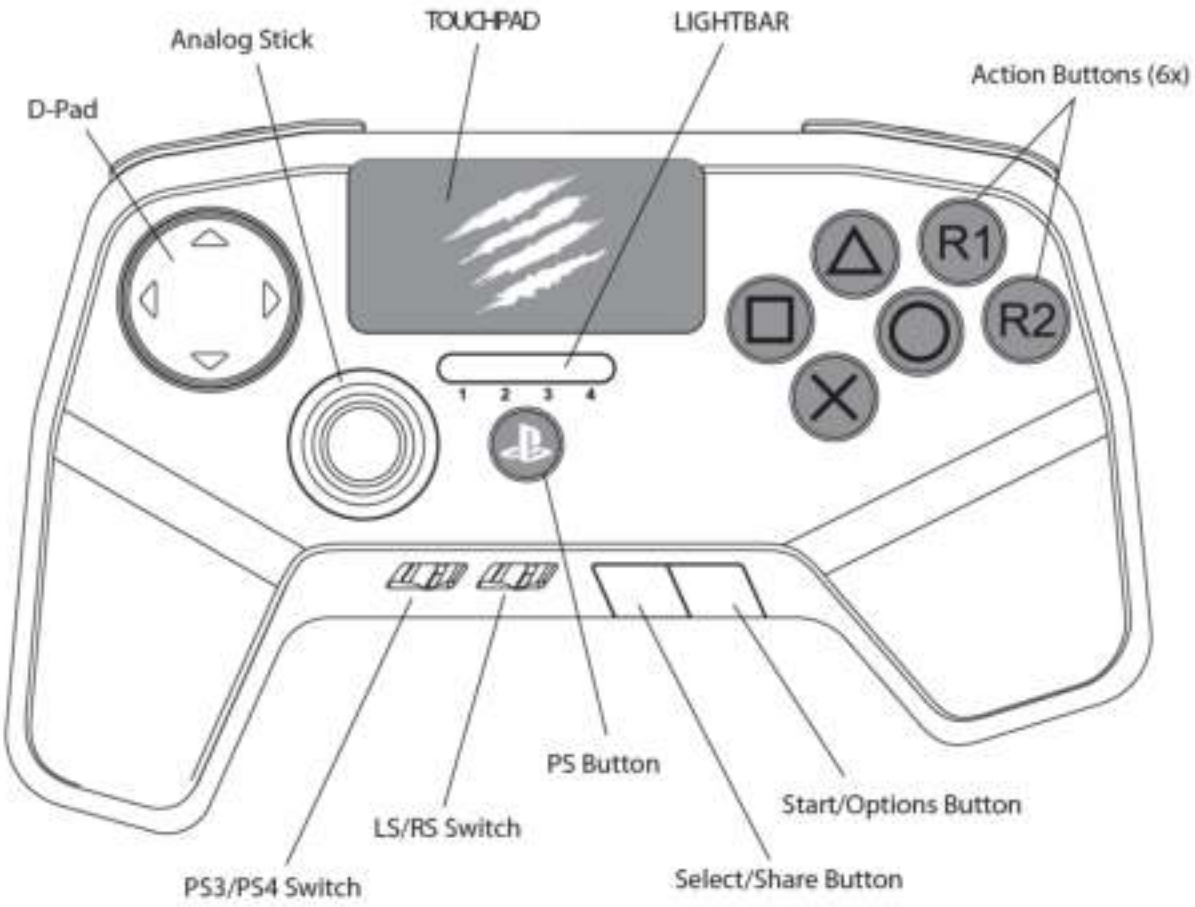

PS3/PS4 Switch

A “PS3/PS4” switch on the control module provides the ability to toggle between using the FightStick for the PlayStation 3 or PlayStation 4 console.

Set "PS3/PS4" Switch to desired location before plugging in USB.
1. PS3 Mode - PS, Start, Select Buttons function for PlayStation 3 console
2. PS4 Mode - PS, Options, Share Buttons function for PlayStation 4 console

NEW! Analog Stick and LS/RS Switch

The “FightPad PRO” is equipped with a 2-way switch labeled “LS” and “RS,” which allows the analog stick to emulate either the left or right analog stick of a standard controller. Set the switch to the desired location to make use of this feature. Pressing inward on the analog stick will function as “L3” or “R3.”

In Street Fighter V, Right Analog can be used to cycle through dummy state, guard, recovery, and counter settings, or for controlling the dummy itself in training mode.

NEW! TOUCHPAD Controls

With the PS4 DUALSHOCK 4 controller now having a dedicated "Share" button, many PS4 titles have been using the touchpad as a substitute "Select" button to bring up menus or perform shortcut options that would have normally been done with a "Select" button on a PS3 version of the game, and for other special options that can be accessed by swiping or touching different areas of the touchpad. Below are some example usage:

- In Street Fighter V, touchpad can be used to display or hide battle info and resetting character position to middle, left, or right of the stage in training mode.
- In Ultra Street Fighter IV, pressing touchpad lets you do button configuration while on the character select screen and show button inputs for how to do combos while in challenge modes.
- In Guilty Gear Xrd -SIGN-, pressing touchpad resets character position to the center of stage in practice mode. Holding Left or Right and then pressing the touchpad resets character position to the left or right side of the stage.
- In Mortal Kombat X, touchpad is used to enter chat mode while in an online lobby.

NEW! L3 and R3 Buttons

In addition to the touchpad, some games also use the L3 and R3 buttons for additional supplemental controls. Below are some example usage:

- In Street Fighter V training mode, L3 can be used to reset back to the last applied training setting. R3 can be used to cycle through dummy status options.
- In Ultra Street Fighter IV training mode, R3 can be used to store a memory state, such as right after landing a special attack. Pressing touchpad lets you quickly restore to this memory state so you can practice what to do after certain situations.
- In Guilty Gear Xrd -SIGN-, L3 is used to switch control and record your training dummy's actions and R3 is used to play this training dummy action back, allowing you to practice against recorded sequences.

NEW! LED Lightbar Functionality

In PS3 mode, know exactly which player you are with individual LEDs indicating your number.

In PS4 mode, the LEDs lights up different colors for PS4 Lightbar functionality. Often used to assign colors (Blue, Red, Green, Purple) for the different player profiles that are signed into the PS4 console, the Lightbar can change colors depending on status of the game. For example, the Lightbar can shine Green when in good health, Yellow at okay health, and Red when in critical health. This feature will be dependent if the game provides such data.

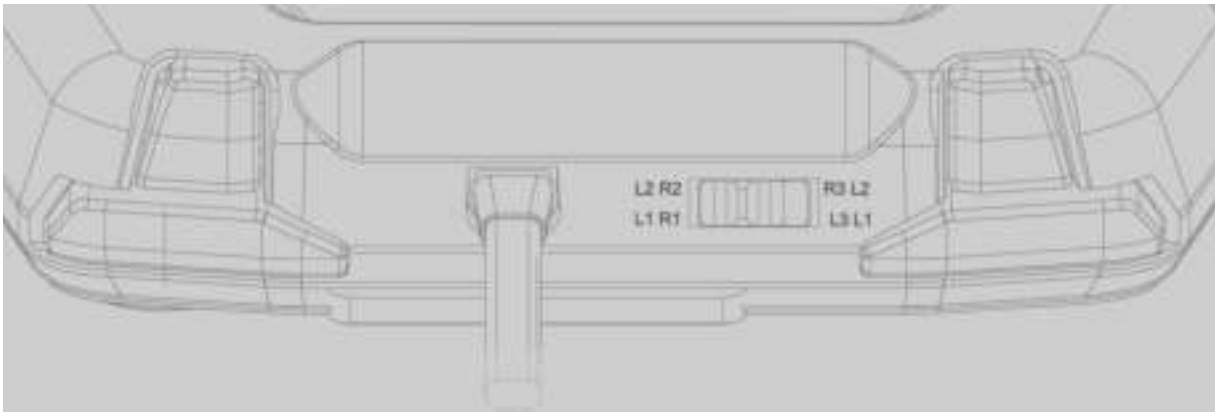

NEW! UTILITY SWITCH

The “FightPad PRO” is equipped with a 2-way UTILITY SWITCH at the top of the controller that toggles functionality of the shoulder and trigger buttons. The arrangement of the padprints for each switch option is the arrangement of what the top buttons will function as when looking at the top of the controller.

1. **STANDARD SETTING:**
    a. When the UTILITY SWITCH is set toward the “left” side of the controller, “L1/L2” and “R1/R2” function as normal.
2. **ALTERNATE SETTING:**
    a. When the UTILITY SWITCH is set toward the “right” side of the controller, “L1/L2” buttons function as “L3/R3”, “R1/R2” buttons function as “L1/L2.”
    b. The Alternate Setting allows access to all eight (8) action buttons with the right hand while adding access to “L3” and “R3” functionality with the left hand.

Reliable USB Connection

The best fighters in the world gain peace of mind by insisting upon a controller with a wired connection. The FightPad PRO’s lengthy 9.8ft (3m) USB cable not only provides a reliable, low-latency link to your console, it maintains a comfortable gaming zone between you and the TV.

PC Compatibility

Update 3/10/2016: Mad Catz PC Drivers enabling X-Input compatibility for our SFV fighting game controllers are now available. Download the appropriate installer file for your controller from our downloads site here: http://madcatz.com/downloads/

The product uses similar solution as DUALSHOCK 4 controllers which is recognizable on PC as DirectInput (D-Input) and will be compatible with any games that support the D-Input interface.

For games that use the X-Input interface, third party emulator/wrapper software that translates D-Input to X-Input may be necessary. Third party software such as X360CE can be found online. Search for "directinput to xinput wrapper".

Street Fighter V for PC will launch starting with support for X-Input controllers. Native support for D-Input controllers is planned as a post launch update.

Alternatively, keyboard mapping software such as JoyToKey and XPadder that can map the D-Pad/joystick and buttons to keyboard actions that are already recognizable in-game can be used. For these, search for "gamepad keyboard emulator".

For Street Fighter V, the default key mapping for keyboard is as follows:

Light Punch = G
Med Punch = H
Heavy Punch = J
Triple Punch = K
Light Kick = B
Med Kick = N
Heavy Kick = M
Triple Kick = ,
Start = ENTER

Directional controls can be done with either arrow keys or WASD.

For more information regarding controller compatibility with PC version of SFV, visit here:

http://steamcommunity.com/app/310950/discussions/0/483368526574345402/
http://steamcommunity.com/app/310950/discussions/
http://steamcommunity.com/app/310950/guides/

Frequently Asked Questions

Q: Does the product have a headset port?
A: The product does not feature a headset port. However, there are other means for chatting online on a PS4 while using the product. Below are a few options:

- Chat via Microphones on a PS4 PlayStation Camera
- Chat via USB Microphone or Studio Mic
- Chat via USB wired headset
- Chat via USB wired base station with wireless headset
- Chat via Bluetooth wireless headset
- Street Fighter V has the ability to authenticate Legacy PS3 USB Controllers for use with the game. This is done by associating the Legacy PS3 USB Controller with a hosting PS4 controller such as a DUALSHOCK4. An alternative method for achieving PS4 online chat while using the product is to put the product in PS3 Mode, authenticate it as a Legacy PS3 USB Controller, and then chat via a headset connected to the headset port on the hosting DUALSHOCK4.

Q: How much does the product weigh?
A: FightPad PRO is approx. 0.6 lbs.

Q: How big is the product?
A: See below for size comparison of FightPad PRO to a DUALSHOCK4 controller.

Links/Additional Info

WEB: http://madcatz.com
STREET FIGHTER V RANGE: http://madcatz.com/StreetFighterV
TWITCH: http://twitch.tv/MADCATZ
TWITTER: http://twitter.com/MADCATZ
FACEBOOK: http://facebook.com/MADCATZ.GLOBAL
TECHNICAL SUPPORT: http://support.madcatz.com