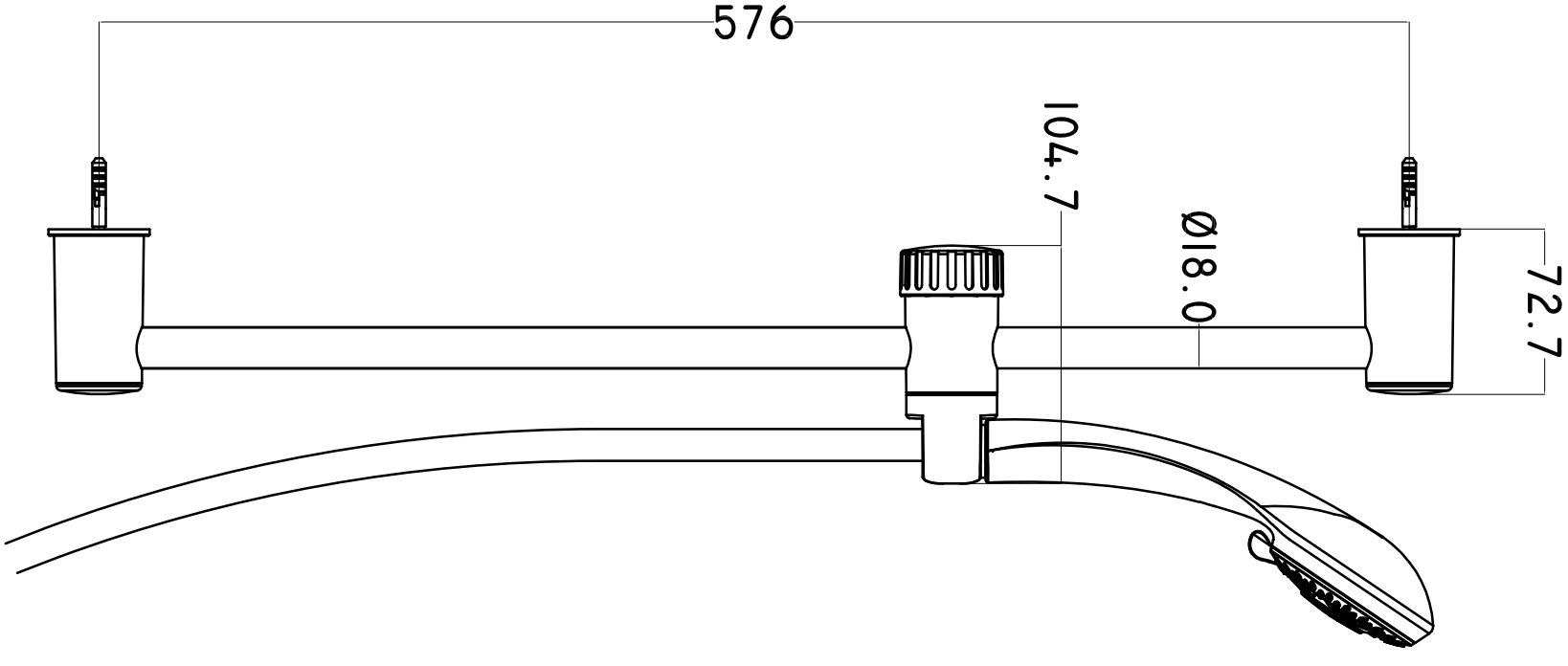
576
104.7
Ø18.0
72.7