dyson v7

Operating manual

Assembly

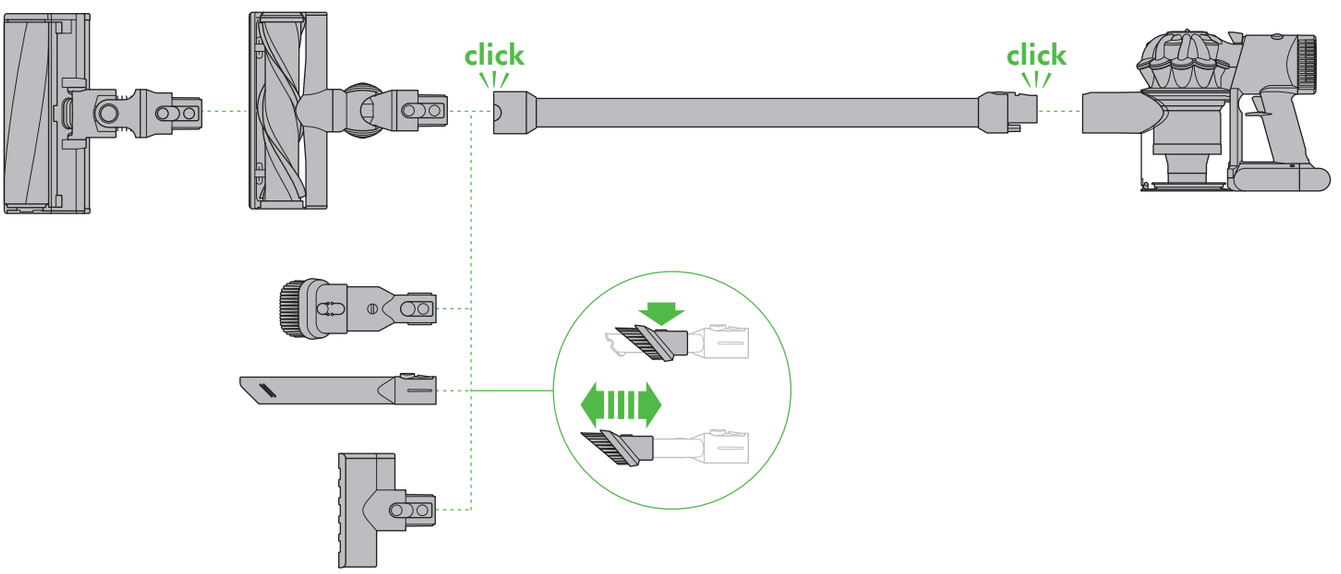

Wash filter

Wash filter with cold water at least once every month. Ensure the filter is completely dry before refitting.

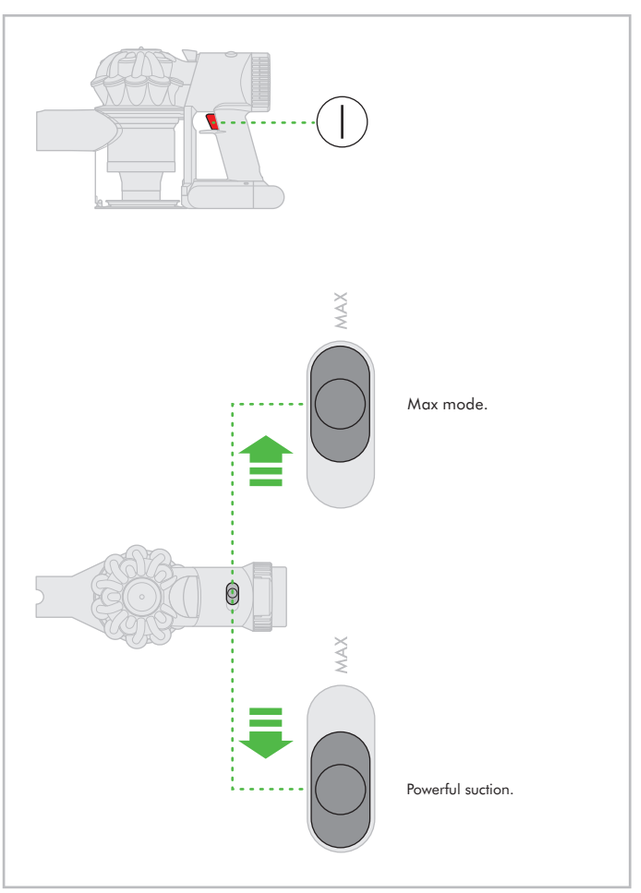

Register today

3 easy ways to register your free 2 year guarantee

SV11

DYSON CUSTOMER CARE

THANK YOU FOR CHOOSING TO BUY A DYSON APPLIANCE.

After registering your 2 year guarantee, your Dyson appliance will be covered for parts and labour for 2 years from the date of purchase, subject to the terms of the guarantee. If you have any queries regarding your Dyson appliance, visit www.dyson.co.uk/support (UK) or www.dyson.ie/support (ROI) for online help, general tips and useful information about Dyson.

Alternatively, you can call the Dyson Helpline with your serial number and details of where/when you bought the appliance.

Your serial number can be found on your rating plate which is on the base of the appliance.

Note your serial number for future reference.

This illustration is for example purposes only.

DYSON CONTACT DETAILS

UK:
Website: www.dyson.co.uk/support
Dyson helpline: 0800 298 0298
Email: askdyson@dyson.co.uk
Address: Dyson Technology Limited,
Tetbury Hill, Malmesbury, Wiltshire, SN16 0RP

ROI:
Website: www.dyson.ie/support
Dyson helpline: 01 475 7109
Email: askdyson@dyson.ie
Address: Dyson Ireland Limited,
Office 2, Central Park, Leopardstown, Dublin 18, Ireland

IMPORTANT SAFETY INSTRUCTIONS

BEFORE USING THIS APPLIANCE READ ALL INSTRUCTIONS AND CAUTIONARY MARKINGS IN THIS MANUAL AND ON THE APPLIANCE

When using an electrical appliance, basic precautions should always be followed, including the following:

⚠ WARNING

These warnings apply to the appliance, and also where applicable, to all tools, accessories, chargers or mains adaptors.

TO REDUCE THE RISK OF FIRE, ELECTRIC SHOCK OR INJURY:

1. This Dyson appliance can be used by children aged from 8 years and above and persons with reduced physical, sensory or reasoning capabilities, or lack of experience and knowledge, only if they have been given supervision or instruction by a responsible person concerning use of the appliance in a safe way and understand the hazards involved. Cleaning and user maintenance should not be performed by children without supervision.
2. Do not allow to be used as a toy. Close attention is necessary when used by or near children. Children should be supervised to ensure that they do not play with the appliance.
3. Use only as described in this Dyson Operating Manual. Do not carry out any maintenance other than that shown in this manual, or advised by the Dyson Helpline.
4. Suitable for dry locations ONLY. Do not use outdoors or on wet surfaces.
5. Do not handle any part of the plug or appliance with wet hands.
6. Do not use with a damaged cable or plug. If the supply cable is damaged it must be replaced by Dyson, its service agent or similarly qualified person in order to avoid a hazard.
7. If the appliance is not working as it should, has received a sharp blow, has been dropped, damaged, left outdoors, or dropped into water, do not use and contact the Dyson Helpline.

dyson 03.02.2017 08:01 - C86002_SV11_OPMAN_UK_X285A_V7-BRUSHED-FLUFFY-MINI-MTH-NON-HEPA-86002.indd_15_4c0s

8. Contact the Dyson Helpline when service or repair is required. Do not disassemble the appliance as incorrect reassembly may result in an electric shock or fire.
9. Do not stretch the cable or place the cable under strain. Keep the cable away from heated surfaces. Do not close a door on the cable, or pull the cable around sharp edges or corners. Arrange the cable away from traffic areas and where it will not be stepped on or tripped over. Do not run over the cable.
10. Do not unplug by pulling on the cable. To unplug, grasp the plug, not the cable. The use of an extension cable is not recommended.
11. Do not use to pick up water.
12. Do not use to pick up flammable or combustible liquids, such as petrol, or use in areas where they or their vapours may be present.
13. Do not pick up anything that is burning or smoking, such as cigarettes, matches, or hot ashes.
14. Keep hair, loose clothing, fingers, and all parts of the body away from openings and moving parts, such as the brush bar. Do not point the hose, wand or tools at your eyes or ears or put them in your mouth.
15. Do not put any object into openings. Do not use with any opening blocked; keep free of dust, lint, hair and anything that may reduce airflow.
16. Use only Dyson recommended accessories and replacement parts.
17. Do not use without the clear bin and filter in place.
18. Unplug when not in use for extended periods and before maintenance or servicing.
19. Use extra care when cleaning on stairs.
20. Do not install, charge or use this appliance outdoors, in a bathroom or within 3 metres (10 feet) of a pool. Do not use on wet surfaces and do not expose to moisture, rain or snow.
21. Use only Dyson chargers for charging this Dyson appliance. Use only Dyson batteries: other types of batteries may burst, causing injury to persons and damage.
22. FIRE WARNING – Do not place this product on or near a cooker or any other hot surface and do not incinerate this appliance even if it is severely damaged. The battery might catch fire or explode.
23. Always turn 'OFF' the appliance before connecting or disconnecting the motorised brush bar.
24. FIRE WARNING – Do not apply any fragrance or scented product to the filter(s) of this appliance. The chemicals in such products are known to be flammable and can cause the appliance to catch fire.

READ AND SAVE THESE INSTRUCTIONS

This Dyson appliance is intended for household use only.

Do not use near naked flames.

Do not store near heat sources.

Do not pick up water or liquids.

Do not pick up burning objects.

Do not put hands near the brush bar when the appliance is in use.

Do not place on or near the cooker

dyson 03.02.2017 08:01 - C86002_SV11_OPMAN_UK_X285A_V7-BRUSHED-FLUFFY-MINI-MTH-NON-HEPA-86002.indd_15_4c0s

Power mode and run-time

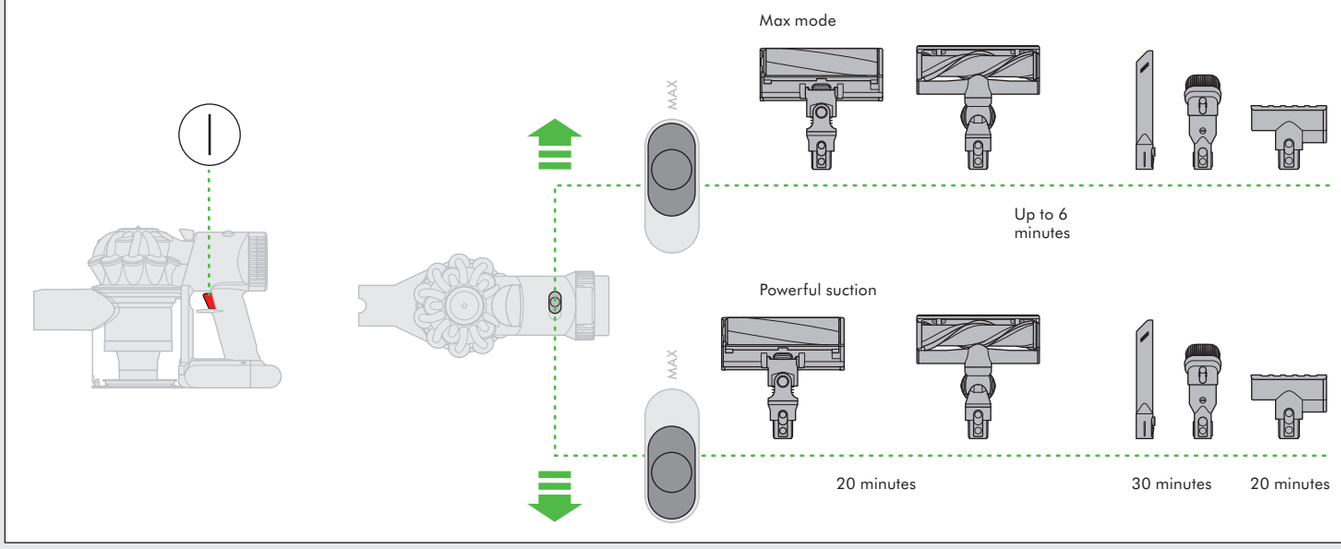

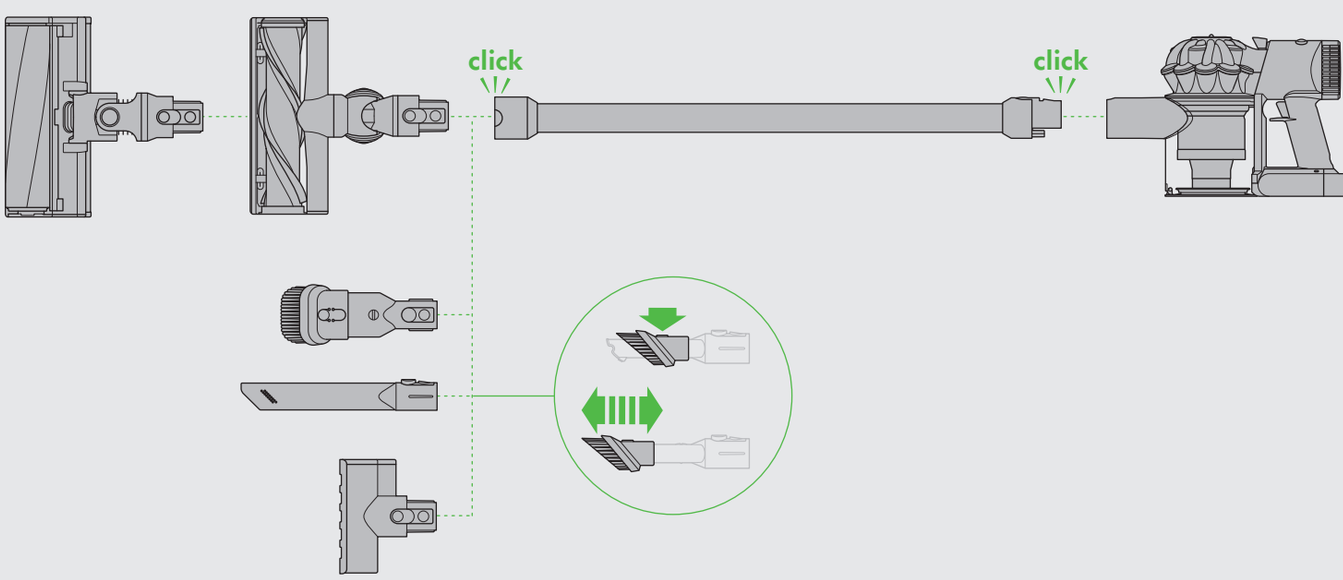

Emptying the clear bin

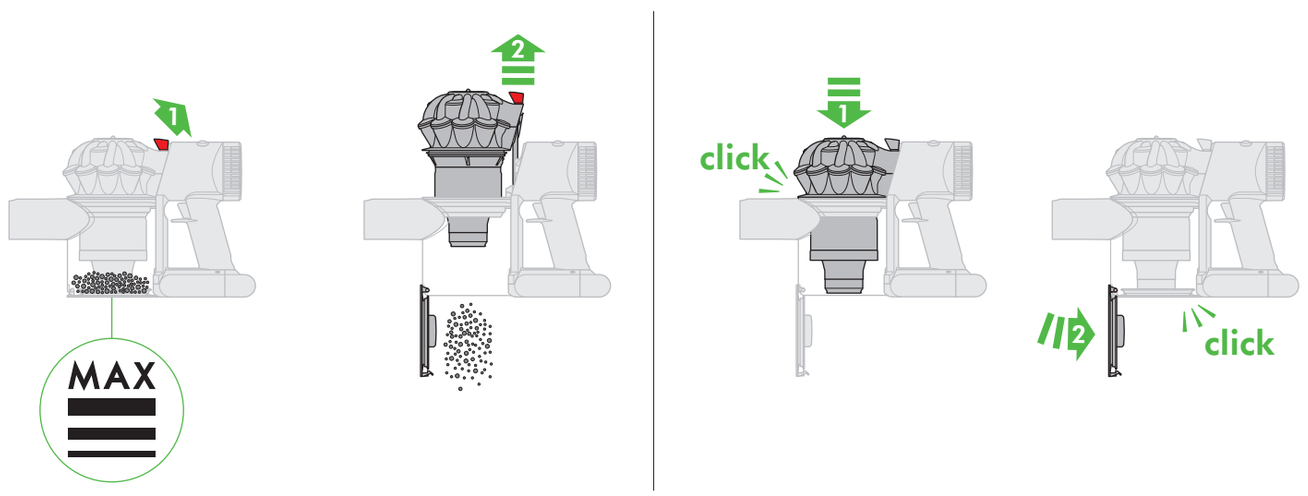

dyson 03.02.2017 08:01 - C86002_SV11_OPMAN_UK_X285A_V7-BRUSHED-FLUFFY-MINI-MTH-NON-HEPA-86002.indd_15_4c0s

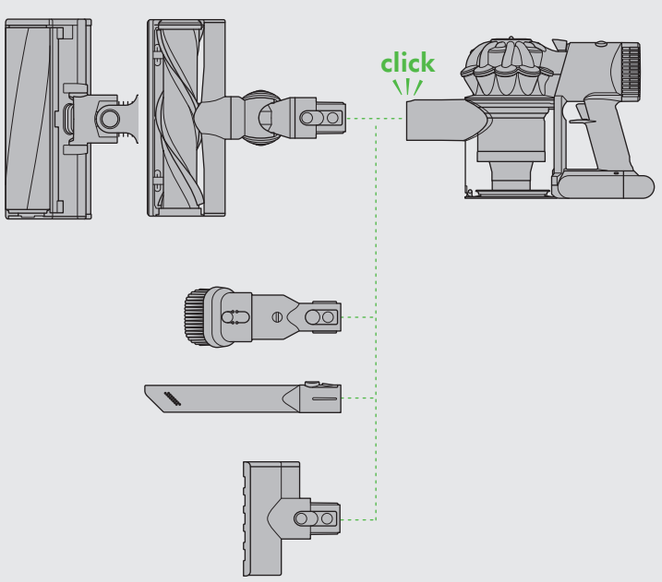

Recharging on the dock

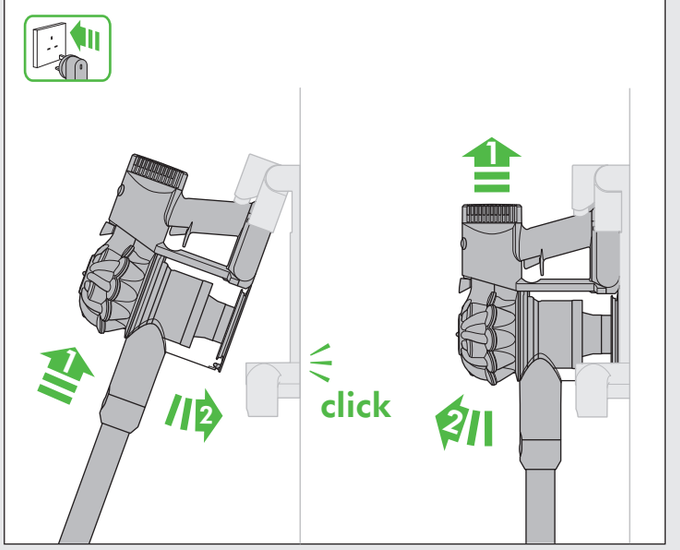

Light during charging

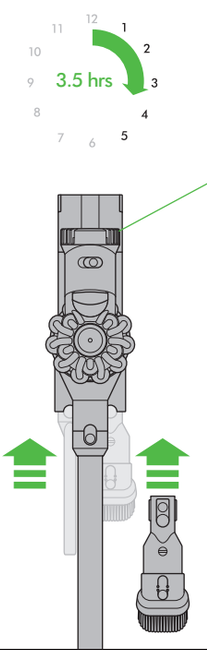

Solid blue:
Charging.

Flashing blue – Not charging – Re-fit charger or try another socket. If warning light persists, contact the Dyson Helpline.

Lights off:
Charging complete.

Solid amber: Not charging, temporary fault (e.g. too hot/cold).

Flashing red: Fault (contact Dyson helpline).

Lights during use

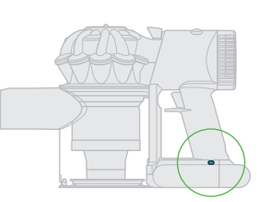

Solid blue: 'ON'.

Flashing blue: No power, charge battery.

Flashing amber: No power, temporary fault (e.g. too hot/cold).

Solid amber: Fault – if this persists contact the Dyson Helpline.

Flashing red: Fault (contact Dyson helpline).

dyson 03.02.2017 08:01 - C86002_SV11_OPMAN_UK_X285A_V7-BRUSHED-FLUFFY-MINI-MTH-NON-HEPA-86002.indd_15_4c0s

Looking for blockages

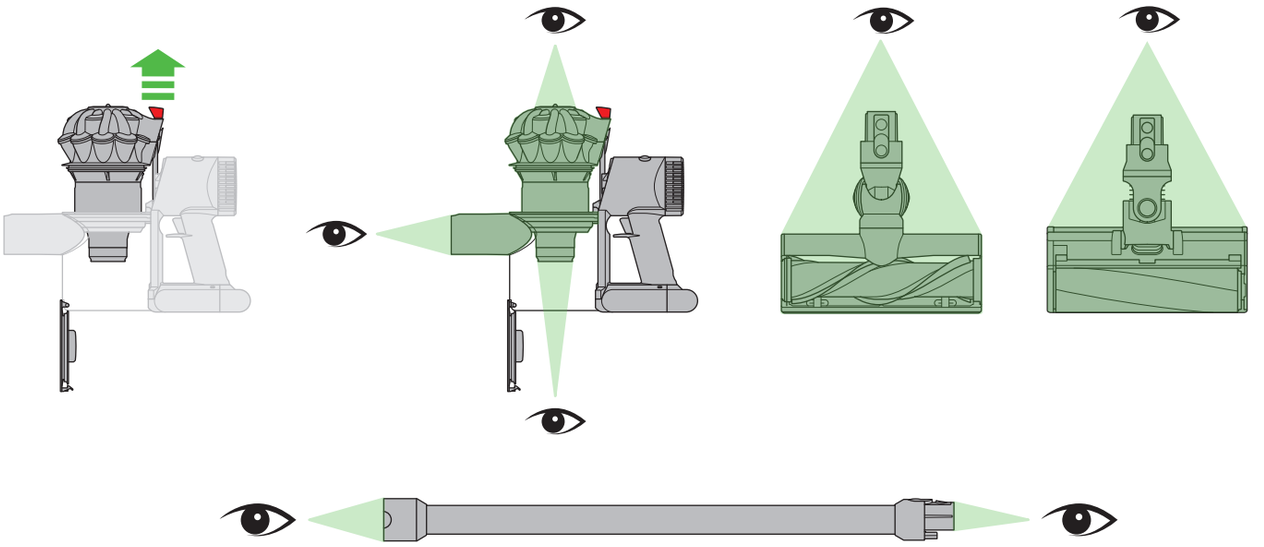

Stubborn blockages – Disassembly

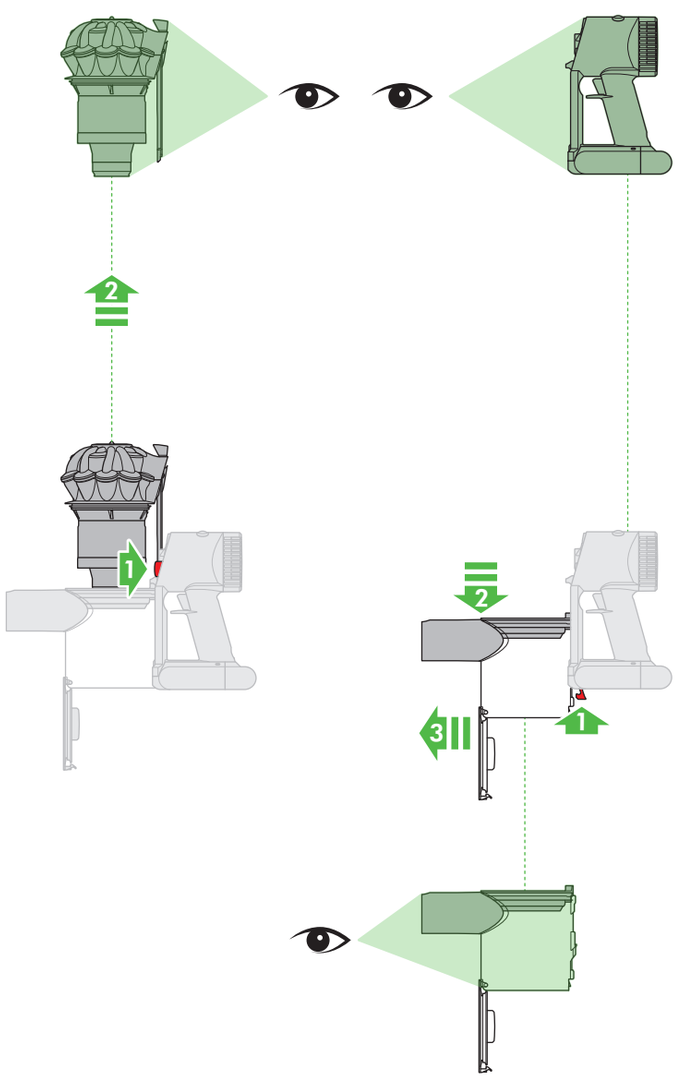

Reassembly

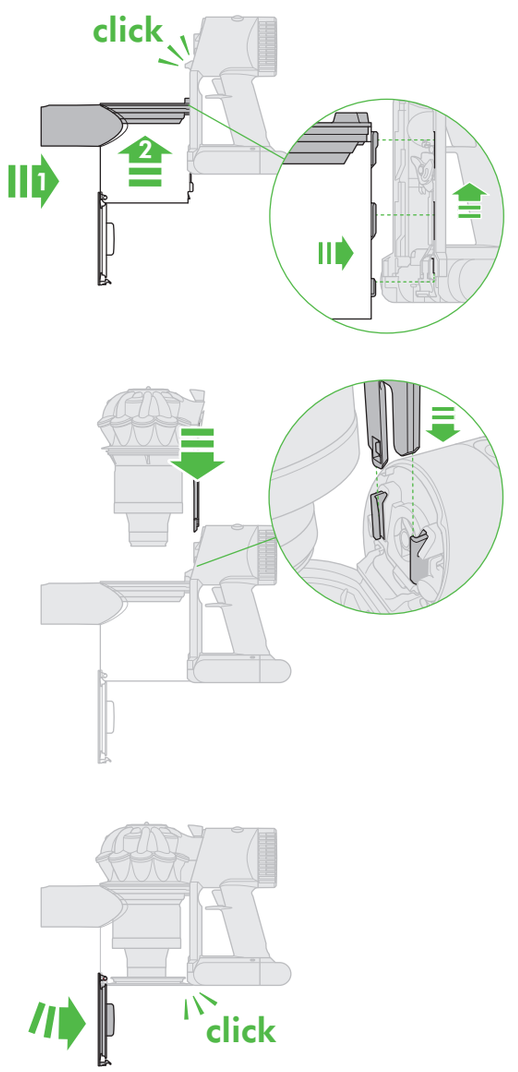

dyson 03.02.2017 08:01 - C86002_SV11_OPMAN_UK_X285A_V7-BRUSHED-FLUFFY-MINI-MTH-NON-HEPA-86002.indd_15_4c0s

Important!
Wash filter

Wash filter with cold water at least once every month.
Ensure the filter is completely dry before refitting.

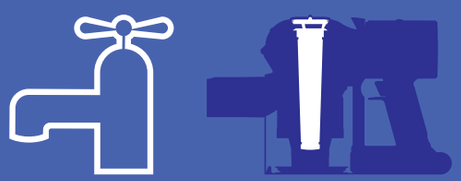

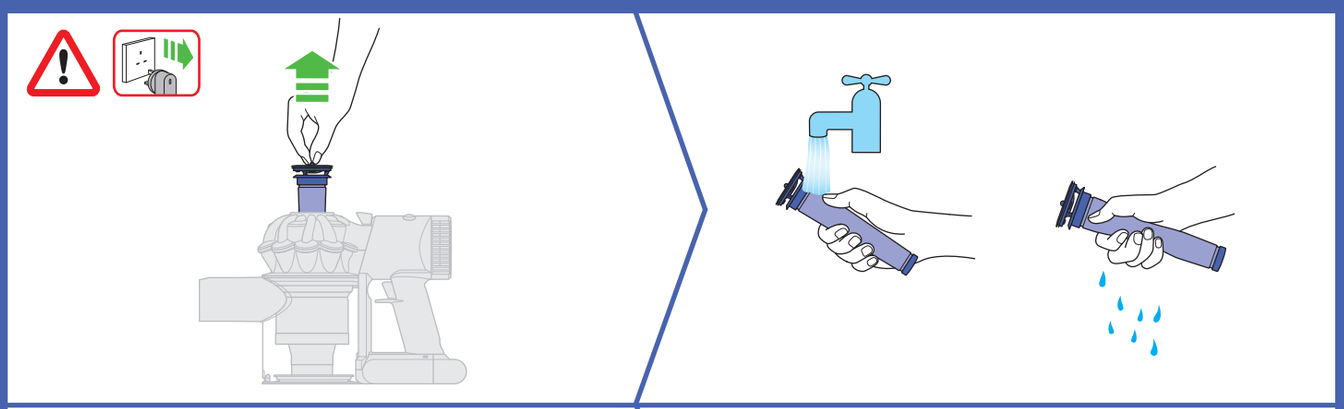

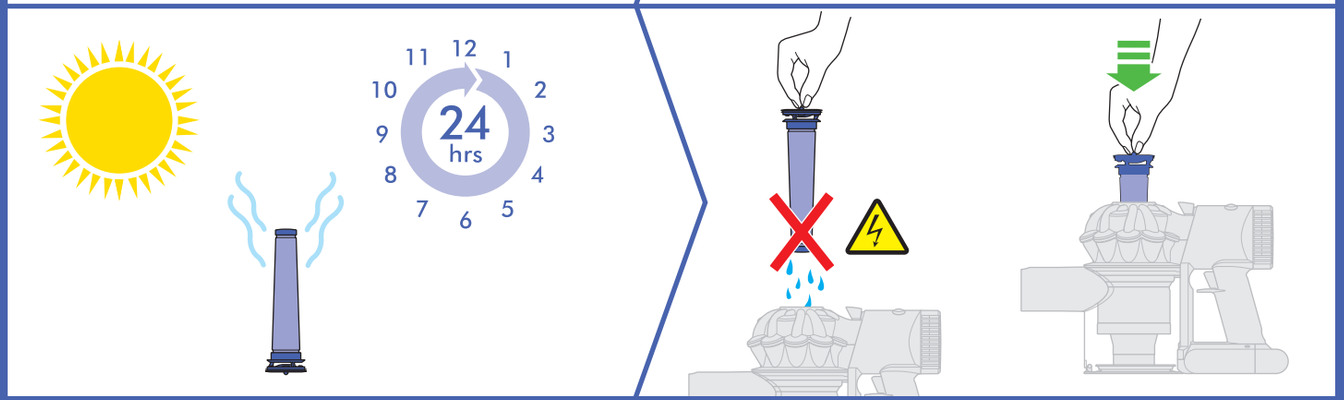

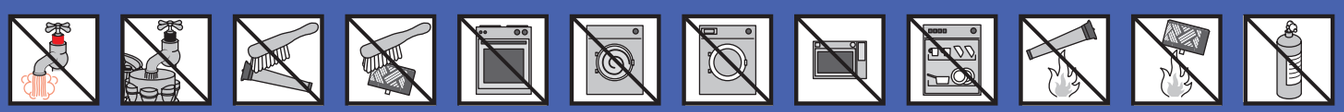

Direct drive cleanerhead: Clearing obstructions

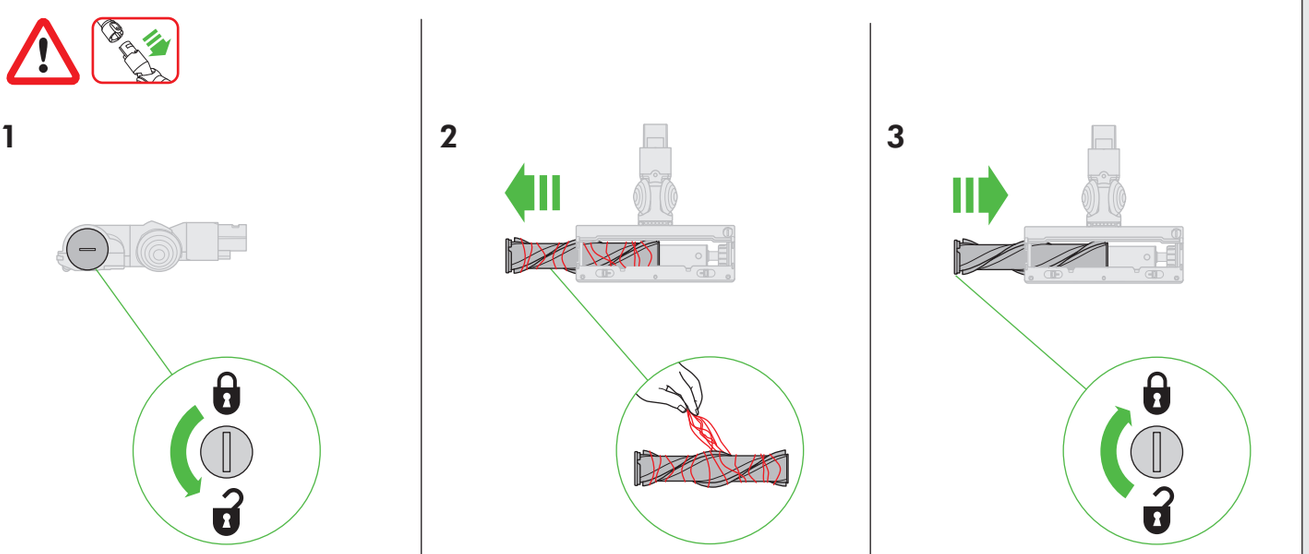

dyson 03.02.2017 08:01 - C86002_SV11_OPMAN_UK_X285A_V7-BRUSHED-FLUFFY-MINI-MTH-NON-HEPA-86002.indd_15_4c0s

Soft roller cleanerhead: Clearing brush bar obstructions

1

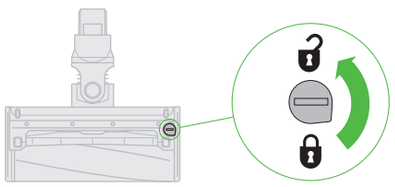

2

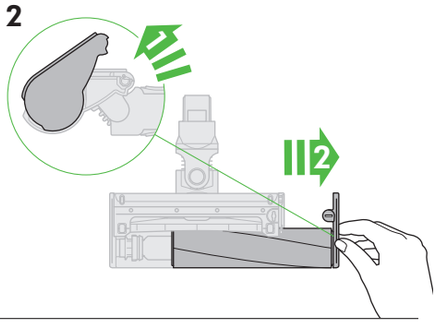

3

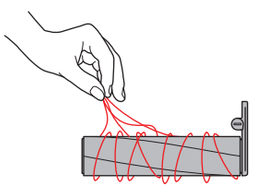

4

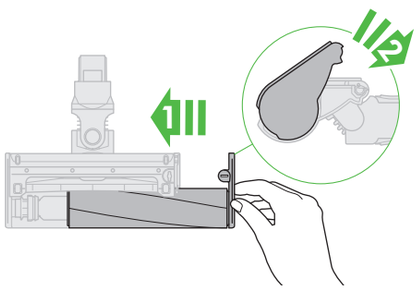

5

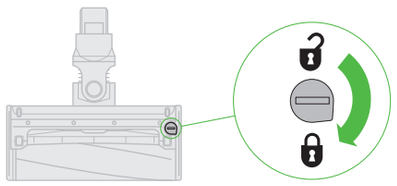

Soft roller cleanerhead: washing the brush bar

1

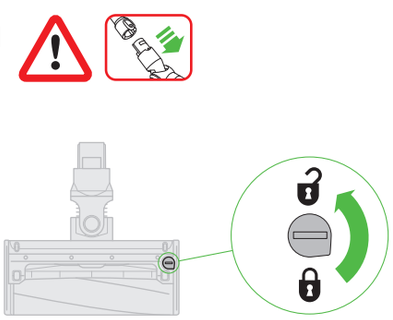

2

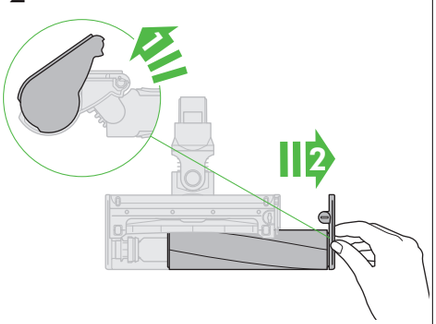

3

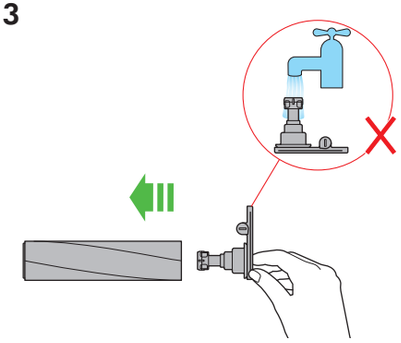

4

5

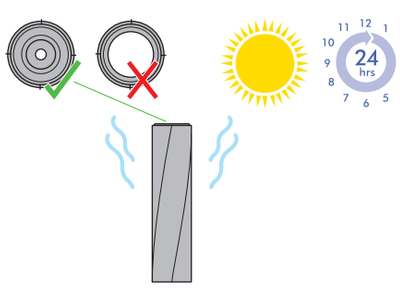

6

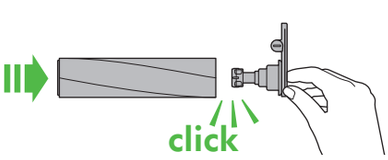

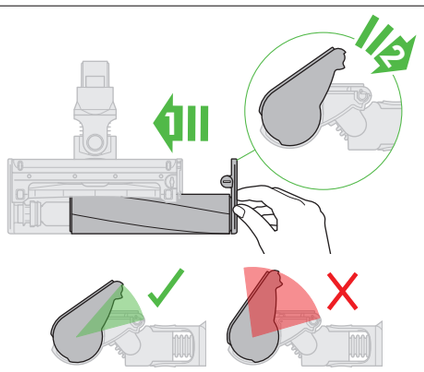

7

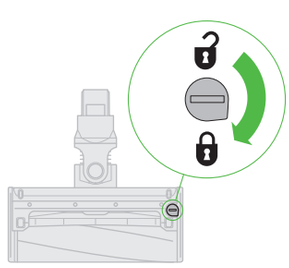

dyson 03.02.2017 08:01 - C86002_SV11_OPMAN_UK_X285A_V7-BRUSHED-FLUFFY-MINI-MTH-NON-HEPA-86002.indd_15_4c0s

Clearing mini motorised tool brush bar obstructions

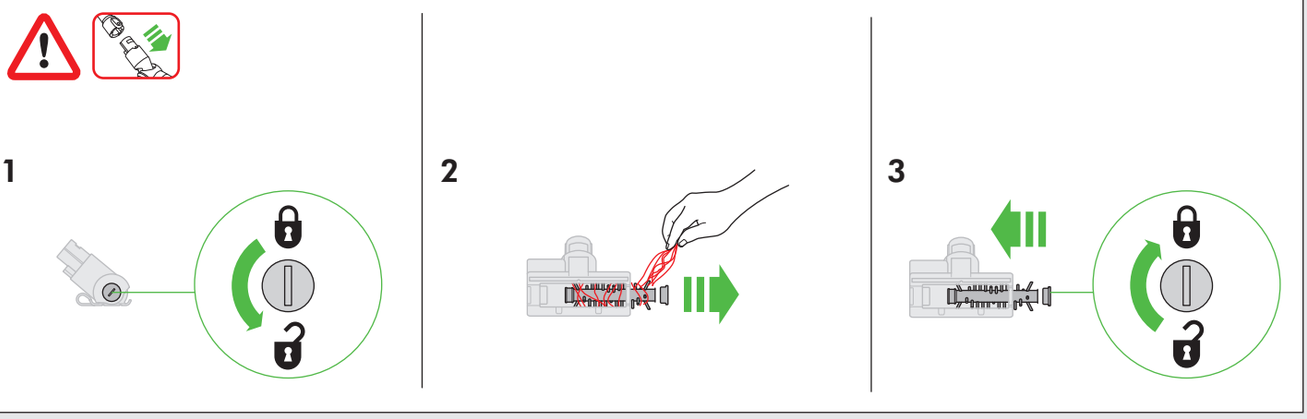

Using your Dyson appliance

Please read the 'Important Safety Instructions' in this Dyson operating manual before proceeding.

Operation

- Do not use outdoors or on wet surfaces or to vacuum water or other liquids – electric shock could occur.
- Ensure the appliance remains upright in use and in storage. Dirt and debris may be released if it is turned upside down.
- Do not operate while checking for blockages.
- For domestic indoor and car use only. Do not use it whilst the car is in motion or while driving.
- To operate the Max mode, locate the switch on the top of the appliance. Slide the switch to the Max mode position.
- To switch off Max mode, slide the switch back to the Powerful Suction mode position.
- This appliance has carbon fibre brushes. Take care if coming into contact with them, as they may cause minor skin irritation. Wash your hands after handling the brushes.

Docking station installation

- Use appropriate mounting hardware for your wall type and ensure that the docking station is mounted securely. Ensure no pipe work (gas, water, air) or electrical cables, wires or ductwork are located directly behind the mounting area. The docking station must be mounted in accordance with regulations and applicable codes/standards (state and local laws may apply). Dyson recommends the use of protective clothing, eyeware and materials when installing the docking station.

Carpets or hard floors

- Before vacuuming your flooring, rugs and carpets, check the manufacturer's recommended cleaning instructions.
- The brush bar on the appliance can damage certain carpet types and floors. Some carpets will fuzz if a rotating brush bar is used when vacuuming. If this happens, we recommend vacuuming without the motorised floor tool and consulting with your flooring manufacturer.
- Before vacuuming highly polished floors, such as wood or lino, first check that the underside of the floor tool and its brushes are free from foreign objects that could cause marking.

Looking after your Dyson appliance

- Do not carry out any maintenance or repair work other than that shown in this Dyson Operating Manual, or advised by the Dyson Helpline.
- Only use parts recommended by Dyson. If you do not this could invalidate your guarantee.
- Store the appliance indoors. Do not use or store it below 3°C (37.4°F). Ensure the appliance is at room temperature before operating.
- Clean the appliance only with a dry cloth. Do not use any lubricants, cleaning agents, polishes or air fresheners on any part of the appliance.
- Check the brush bar regularly and clear away any debris (such as hair). Debris left on the brush bar may cause damage to flooring when vacuuming.

Vacuuming

- Do not use without the clear bin and filters in place.
- Fine dirt such as flour should only be vacuumed in very small amounts.
- Do not use the appliance to pick up sharp hard objects, small toys, pins, paper clips, etc. They may damage the appliance.
- When vacuuming, certain carpets may generate small static charges in the clear bin. These are harmless and are not associated with the mains electricity supply. To minimise any effect from this, do not put your hand or insert any object into the clear bin unless you have first emptied it. Clean the clear bin with a damp cloth only. (See 'Cleaning the clear bin'.)
- Use extra care when cleaning on stairs.
- Do not rest the appliance on chairs, tables, etc.
- Do not press down on the nozzle with excessive force when using the appliance as this may cause damage.
- Do not leave the cleaner head in one place on delicate floors.
- On waxed floors the movement of the cleaner head may create an uneven lustre. If this happens, wipe with a damp cloth, polish the area with wax, and wait for it to dry.

Emptying the clear bin

- Empty as soon as the dirt reaches the level of the MAX mark – do not overfill.
- Ensure the appliance is disconnected from the charger before emptying the clear bin. Be careful not to pull the 'ON' trigger.
- To make emptying the clear bin easier, it is advisable to remove the wand and floor tool.
- To minimise dust/allergen contact when emptying, encase the clear bin tightly in a plastic bag and empty.
- To release the dirt, hold the appliance by the handle, pull the red lever back and lift upwards to release the cyclone. Continue until the bin base automatically opens and releases the dirt.
- Remove the clear bin carefully from the bag.
- Seal the bag tightly, dispose as normal.
- To close, push the cyclone downwards until it is in the normal position and manually close the base of the bin – the base will click when it is securely in place.

Cleaning the clear bin

- Ensure the appliance is disconnected from the charger before removing the clear bin. Be careful not to pull the 'ON' trigger.
- Remove the wand and floor tool.
- To remove the cyclone, hold the appliance by the handle, pull the red lever towards you and lift upwards until the bin opens, then push in the red button located behind the cyclone and lift the cyclone out.
- To detach the clear bin from the appliance, pull back on the red catch located at the base, slide the clear bin down and carefully remove forwards from the main body.
- Clean the clear bin with a damp cloth only.
- Do not use detergents, polishes or air fresheners to clean the clear bin.
- Do not put the clear bin in a dishwasher.
- Ensure the clear bin is completely dry before replacing.
- To replace the clear bin, align the tabs on the clear bin with the grooves on the main body and slide upwards into place until the catch clicks.
- Slide the cyclone into the grooves of the main body and push downwards until it is in its normal position and manually close the base of the bin – the base will click when it is securely in place.

Washable parts

Your appliance has washable parts, which require regular cleaning. Follow the instructions below.

dyson 03.02.2017 08:01 - C86002_SV11_OPMAN_UK_X285A_V7-BRUSHED-FLUFFY-MINI-MTH-NON-HEPA-86002.indd_15_4c0s

Washing the brush bar

- Your appliance has a washable brush bar, check and wash it regularly according to the following instructions to maintain performance.
- Ensure the appliance is disconnected from the charger before removing the brush bar. Be careful not to pull the 'ON' trigger.

To remove, wash and replace the brush bar:

- Please refer to the 'Washing the brush bar' illustrations alongside the instructions below.
- Turn the cleaner head upside down so the underside of the cleaner head is facing you. Use a coin to turn the fastener one quarter anti-clockwise to the unlocked position.
- Rotate the end cap to the open position. Gently slide the brush bar away from the cleaner head.
- Remove the end cap from the brush bar.
- Hold the brush bar under running water and gently rub to remove any lint or dirt.
- Stand the brush bar upright as shown. Leave to dry completely for a minimum of 24 hours.
- Before replacing, check that the brush bar is completely dry.
- Reattach the end cap to the brush bar.
- Slide the brush bar back onto the cleaner head, around the motor. The end cap should be in the open position as shown. Once in place, rotate the end cap back into the closed position.
- Close the fastener by turning a quarter turn clockwise. Ensure that the fastener is fully turned and the brush bar is secure.

Washing your filter

- Ensure the appliance is disconnected from the charger before removing the filter. Be careful not to pull the 'ON' trigger.
- Your appliance has one washable filter, located as shown.
- To remove the filter, lift it out of the top of the appliance.
- Check and wash the filter regularly according to instructions to maintain performance.
- The filter may require more frequent washing if vacuuming fine dust or if used mainly in 'Powerful suction' mode.
- Wash the filter with cold water only. No hot water and no detergents.
- Run water over the outside of the filter until the water runs clear.
- Squeeze and twist with both hands to make sure the excess water is removed.
- Leave the filter to dry completely for a minimum of 24 hours.
- Do not put the filter in a dishwasher, washing machine, tumble dryer, oven, microwave or near a naked flame.
- To refit, place the dry filter back into the top of the appliance. Make sure it is seated properly.

Blockages – automatic cut-out

- This appliance is fitted with an automatic cut-out.
- If any part becomes blocked the appliance may automatically cut out.
- This will happen after the motor pulses a number of times (i.e switches on and off in quick succession).
- Leave to cool down before looking for blockages.
- Ensure the appliance is disconnected from the charger before looking for blockages. Failure to do so could result in personal injury.
- Clear any blockage before restarting.
- Refit all parts securely before using.
- Clearing blockages is not covered by your guarantee.

Looking for blockages

The motor will pulse when there is a blockage. Please follow the instructions below to locate the blockage:

- Ensure the appliance is disconnected from the charger before looking for blockages. Be careful not to pull the 'ON' trigger.
- Do not operate while checking for blockages. Doing so could result in personal injury.
- Beware of sharp objects when checking for blockages.
- To check for blockages in the main body of the appliance, remove the clear bin and cyclone as per the instructions in the cleaning the clear bin section and remove the blockage. Please consult the 'Stubborn blockages' section of the illustrations for further guidance.
- If you cannot clear an obstruction you may need to remove the brush bar. Use a coin to unlock the fastener, slide the brush bar out of the cleanerhead and remove the obstruction. Replace the brush bar and secure it by tightening the fastener. Ensure it is fixed firmly before operating the appliance.
- This appliance has carbon fibre brushes. Take care if coming into contact with them, as they may cause minor skin irritation. Wash your hands after handling the brushes.
- Refit all parts securely before using.
- Clearing blockages is not covered by your guarantee.

Charging and storing

- This appliance will switch 'OFF' if the battery temperature is below 3°C (37.4°F). This is designed to protect the motor and battery. Do not charge the appliance and then move it to an area with a temperature below 3°C (37.4°F) for storage purposes.
- To help prolong battery life, avoid recharging immediately after a full discharge. Allow to cool for a few minutes.
- Avoid using the appliance with the battery flush to a surface. This will help it run cooler and prolong battery run time and life.

Battery safety instructions

- If the battery needs replacing please contact the Dyson Helpline.
- Use only Dyson chargers for charging this Dyson appliance.
- The battery is a sealed unit and under normal circumstances poses no safety concerns. In the unlikely event that liquid leaks from the battery do not touch the liquid and observe the following precautions:
  - Skin contact – can cause irritation. Wash with soap and water.
  - Inhalation – can cause respiratory irritation. Expose to fresh air and seek medical advice.
  - Eye contact – can cause irritation. Immediately flush eyes thoroughly with water for at least 15 minutes. Seek medical attention.
  - Disposal – wear gloves to handle the battery and dispose of immediately, following local ordinances or regulations.

⚠ Caution

The battery used in this device may present a risk of fire or chemical burn if mistreated. Do not disassemble, short contacts, heat above 60°C (140°F), or incinerate. Keep away from children. Do not disassemble and do not dispose of in fire.

Disposal information

- Dyson products are made from high grade recyclable materials. Recycle where possible.
- The battery should be removed from the product before disposal.
- Dispose of or recycle the battery in accordance with local ordinances or regulations.
- Dispose of the exhausted filter in accordance with local ordinances or regulations.
- This marking indicates that this product should not be disposed with other household wastes throughout the EU. To prevent possible harm to the environment or human health from uncontrolled waste disposal, recycle it responsibly to promote the sustainable reuse of material resources. To return your used device, please use the return and collection systems or contact the retailer where the product was purchased. They can take this product for environmentally safe recycling.

Dyson customer care

Thank you for choosing to buy a Dyson appliance.

After registering your 2 year guarantee, your Dyson appliance will be covered for parts and labour for 2 years from the date of purchase, subject to the terms of the guarantee. If you have any queries regarding your Dyson appliance, visit www.dyson.co.uk/support (UK) or www.dyson.ie/support (ROI) for online help, general tips and useful information about Dyson.

Alternatively, you can call the Dyson Helpline with your serial number and details of where/when you bought the appliance.

If your Dyson appliance needs a service, call the Dyson Helpline so we can discuss the available options. If your Dyson appliance is under guarantee, and the repair is covered, it will be repaired at no cost.

Please register as a Dyson appliance owner

The guarantee for this product is 2 years from the the date of purchase. Please register your guarantee within 30 days of your purchase date. To help us ensure you receive prompt and efficient service, please register immediately after purchase. Please keep the receipt showing the date of purchase.

To help us ensure you receive prompt and efficient service, please register as a Dyson appliance owner. There are three ways to do this:

- Online at www.dyson.co.uk/register (UK) or www.dyson.ie/register (ROI).
- Telephone the Dyson Helpline on 0800 298 0298 (UK) or 01 475 7109 (ROI).
- Complete the enclosed form and post it to us.
- By registering online or by phone you will:
  - Protect your investment with a two year parts and labour guarantee.
  - Receive helpful tips on using your machine.
  - Get expert advice from the Dyson Helpline.
  - Be the first to hear about our latest inventions.
- Registering only takes a few minutes and all you need is your serial number.

Limited 2 year guarantee

Terms and conditions of the Dyson 2 year limited guarantee

What is covered

- The repair or replacement of your Dyson appliance (at Dyson's discretion) if it is found to be defective due to faulty materials, workmanship or function within 2 years of purchase or delivery (if any part is no longer available or out of manufacture Dyson will replace it with a functional replacement part).
- Where this machine is sold outside of the EU, this guarantee will only be valid if the appliance is used in the country in which it was sold.
- Where this machine is sold within the EU, this guarantee will only be valid (i) if the appliance is used in the country in which it was sold or (ii) if the appliance is used in Austria, Belgium, France, Germany, Ireland, Italy, Netherlands, Spain or the United Kingdom and the same model as this appliance is sold at the same voltage rating in the relevant country.

dyson 03.02.2017 08:01 - C86002_SV11_OPMAN_UK_X285A_V7-BRUSHED-FLUFFY-MINI-MTH-NON-HEPA-86002.indd_15_4c0s

What is not covered

Dyson does not guarantee the repair or replacement of a product where a defect is the result of:

- Accidental damage, faults caused by negligent use or care, misuse, neglect, carelessness or operation or handling of the appliance which is not in accordance with the Dyson Operating Manual.
- Use of the appliance for anything other than normal domestic household purposes.
- Use of parts not assembled or installed in accordance with the instructions of Dyson.
- Use of parts and accessories which are not genuine Dyson components.
- Faulty installation (except where installed by Dyson).
- Repairs or alterations carried out by parties other than Dyson or its authorised agents.
- Blockages – please refer to the Dyson Operating Manual for details of how to look for and clear blockages.
- Normal wear and tear (e.g. fuse, brush bar etc.).
- Use of this appliance on rubble, ash, plaster.
- Reduction in battery discharge time due to battery age or use (where applicable).

If you are in any doubt as to what is covered by your guarantee, please contact the Dyson Helpline.

Summary of cover

- The guarantee becomes effective at the date of purchase (or the date of delivery if this is later).
- You must provide proof of (both the original and any subsequent) delivery/purchase before any work can be carried out on your Dyson appliance. Without this proof, any work carried out will be chargeable. Keep your receipt or delivery note.
- All work will be carried out by Dyson or its authorised agents.
- Any parts which are replaced by Dyson will become the property of Dyson.
- The repair or replacement of your Dyson appliance under guarantee will not extend the period of guarantee.
- The guarantee provides benefits which are additional to and do not affect your statutory rights as a consumer.

Important data protection information

When registering your Dyson product:

- You will need to provide us with basic contact information to register your product and enable us to support your guarantee.
- When you register, you will have the opportunity to choose whether you would like to receive communications from us. If you opt-in to communications from Dyson, we will send you details of special offers and news of our latest innovations. We never sell your information to third parties and only use information that you share with us as defined by our privacy policies which are available on our website: privacy.dyson.com.

dyson 03.02.2017 08:01 - C86002_SV11_OPMAN_UK_X285A_V7-BRUSHED-FLUFFY-MINI-MTH-NON-HEPA-86002.indd_15_4c0s

dyson 03.02.2017 08:01 - C86002_SV11_OPMAN_UK_X285A_V7-BRUSHED-FLUFFY-MINI-MTH-NON-HEPA-86002.indd_15_4c0s

dyson 03.02.2017 08:01 - C86002_SV11_OPMAN_UK_X285A_V7-BRUSHED-FLUFFY-MINI-MTH-NON-HEPA-86002.indd_15_4c0s

Important!

Wash filter

Wash filter with cold water at least once every month.
Ensure the filter is completely dry before refitting.

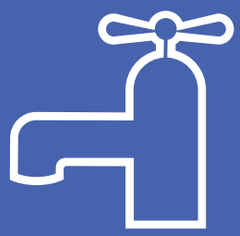

dyson

DYSON CUSTOMER CARE

If you have a question about your Dyson appliance, contact us via the Dyson website or call the Dyson customer care helpline with your serial number and details of where and when you bought the appliance.

DYSON CONTACT DETAILS

UK:
Website: www.dyson.co.uk/support
Dyson helpline: 0800 298 0298
Email: askdyson@dyson.co.uk
Address: Dyson Technology Limited,
Tetbury Hill, Malmesbury, Wiltshire, SN16 0RP

ROI:
Website: www.dyson.ie/support
Dyson helpline: 01 475 7109
Email: askdyson@dyson.ie
Address: Dyson Ireland Limited,
Office 2, Central Park, Leopardstown, Dublin 18, Ireland

JN.86002 PN.232540-27-02 02.02.17

www.dyson.com

dyson 03.02.2017 08:01 - C86002_SV11_OPMAN_UK_X285A_V7-BRUSHED-FLUFFY-MINI-MTH-NON-HEPA-86002.indd_15_4c0s

dyson

Guarantee form

Serial number

Date of purchase / /

Country of purchase UK ROI

Title

Surname

First name

Address

Postcode

email

Telephone

Mobile

As a Dyson appliance owner, you can hear about Dyson inventions, services and products before anyone else. If it's okay to contact you, please let us know how we may do this.

By mail	Yes	No
By phone	Yes	No
By email	Yes	No
By text message	Yes	No

We sometimes ask other companies (such as market researchers) to contact owners on our behalf. We do this to get feedback on ideas or ask you to try new products and services. Would this be okay?

Yes No

3 Easy ways to register

Register online

Visit our website to register your full parts and labour guarantee online.
www.dyson.co.uk/register
www.dyson.ie/register

Register by phone

Call our dedicated helpline. Open Monday to Friday 8am-8pm & Saturday and Sunday 8am-6pm.
UK: 0800 298 0298
ROI: 01 475 7109

Register by mail

Complete and return the form to Dyson in the envelope supplied.