Noctua NH-D15S | Installation Manual | LGA115x

Scan this code to display multi-lingual manuals on your mobile phone.

Dear customer,

Congratulations on choosing the Noctua NH-D15S. Tailored to provide superior RAM and PCIe compatibility, the NH-D15S is an asymmetrical single fan version of Noctua's award-winning flagship model NH-D15. I'm confident that you will be able to sense some of the research, attention and care we've put into making this cooler.

Enjoy your NH-D15S!

Yours sincerely,

Roland Mossig, Noctua CEO

This manual will guide you through the installation process of the SecuFirm2™ mounting system step by step.

Prior to installing the cooler, please consult the compatibility list on our website (www.noctua.at/compatibility) and verify that the cooler is fully compatible with your motherboard.

Should you encounter any difficulties, please check the FAQs on our website (www.noctua.at/faqs) and don't hesitate to contact our support team at support@noctua.at.

Noctua cannot be held responsible for any damage or losses caused by compatibility issues.

Multilingual versions of this manual are available on our website: www.noctua.at/manuals

Required mounting parts:

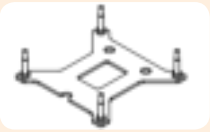

1x NM-IBP2 Backplate

2x NM-IMB2 Mounting Bars

4x NM-IPS1 Spacers

4x NM-ITS1 Thumbscrews

Step 1

Removing the mainboard

In case you want to use the cooler on an assembled system and your case doesn't have a cut-out at the rear side of the mainboard tray, you first have to remove the mainboard from the case in order to be able to install the supplied backplate.

Step 2

Attaching the backplate

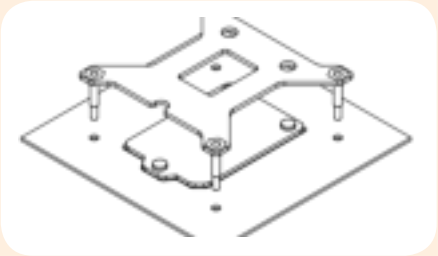

Caution: The supplied backplate will install over the mainboard's stock backplate, so the mainboard's stock backplate must not be taken off.

Place the backplate on the rear side of the mainboard so that the bolts stick through the mounting holes.

Caution: Please make sure that the three cut-outs in the supplied backplate align with the screws of the mainboard's stock backplate.

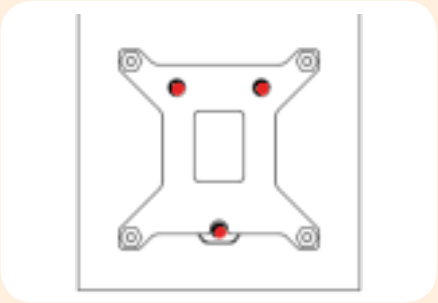

Step 3

Installing the mounting bars

First put the plastic spacers onto the bolts of the backplate, then add the mounting bars.

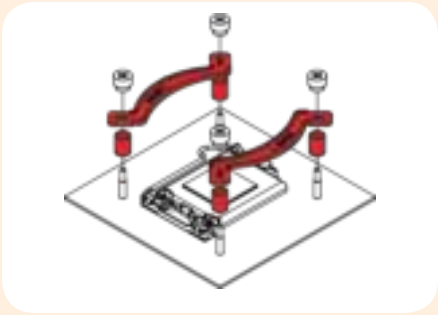

Caution: Choose the alignment of the mounting bars according to the desired final orientation of the cooler:

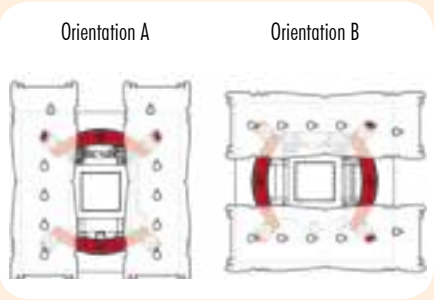

Caution: Make sure that the curved sides of the mounting bars are pointing outwards.

Fix the mounting bars using the 4 thumb screws.

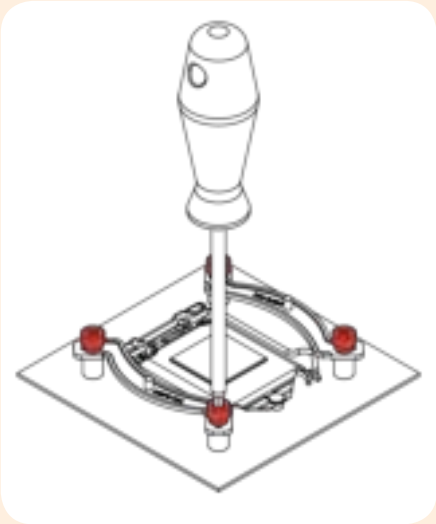

Caution: Gently tighten the screws until they stop, but don't use excessive force.

Step 4

Applying thermal paste

If there are residual traces of thermal paste or thermal pads on your CPU, please clean them off first. Then press a small drop (4-5mm diameter) of NT-H1 onto the centre of the heatspreader.

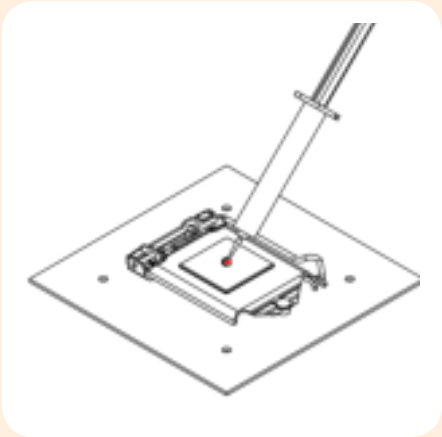

Caution: Applying too much thermal paste will lower heat conductivity and cooling performance!

Step 5

Fastening the heatsink to the CPU

Caution: Please first take off the fan as well as the protection cover at the bottom side of the heatsink.

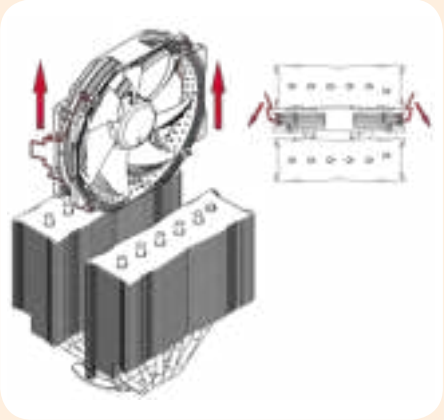

Then put the heatsink onto the CPU and screw it to the screw threads of the mounting bars.

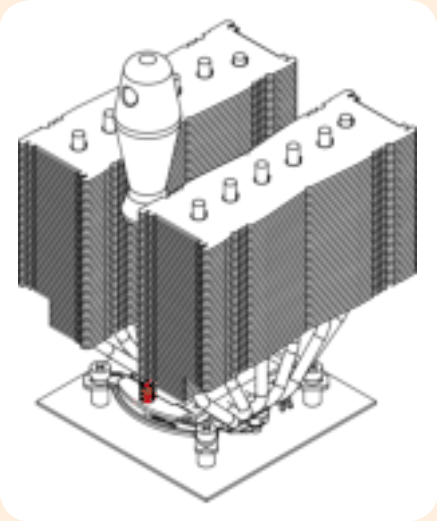

Caution: Tighten the screws until they stop.

Step 6

Fan Setup

Reattach the fan using the supplied steel clips:

1.

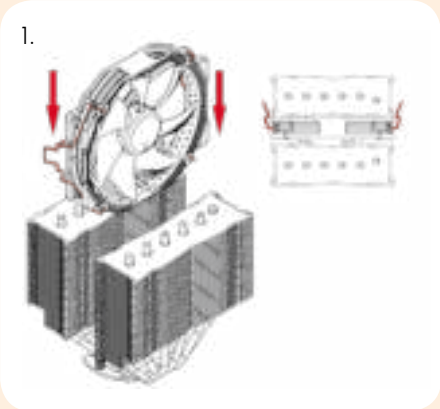

2.

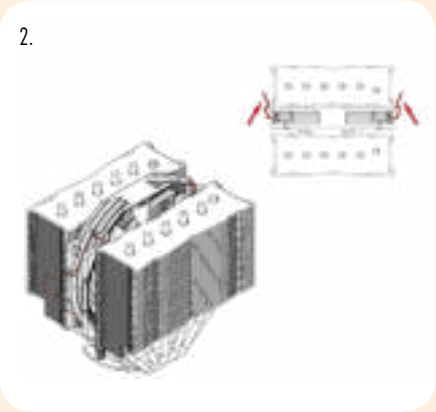

3.

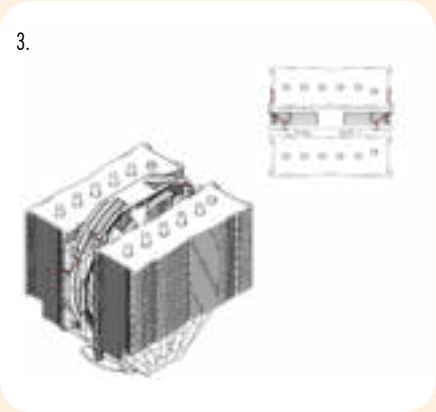

Connect the fan to the mainboard's CPU fan header. Depending on your CPU and the temperature inside the case, you may interconnect the supplied NA-RC7 Low-Noise Adapter (L.N.A.) in order to further reduce the fan's operating noise.

Caution: Never use one adaptor for both fans by putting it before the y-split cable.

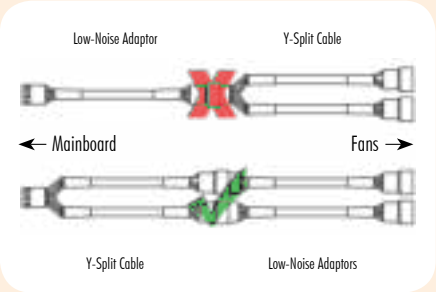

Caution: When using the L.N.A.s, check the temperature of your CPU using appropriate software (e.g. the respective applications of your mainboard manufacturer), in order to evade automatic throttling of the CPU due to the increased temperature. If the cooling performance is insufficient, please increase case ventilation or remove the L.N.A.s.

Adding a second fan

The NH-D15S includes an extra set of fan clips for installing a second fan to the front fin stack in push/pull mode in order to further improve cooling performance. The fan clips support:

- Round frame 140mm fans with 120mm mounting (105mm hole spacing) such as the NF-A15 PWM or the NF-P14r redux models
- Standard 120mm fans (105mm hole spacing) such as the NF-A12, NF-F12 or NF-P12 redux models

Caution:

- It is not possible to install 140mm fans with square frames (124.5mm hole spacing) such as the NF-A14 or NF-P14s redux.
- If you add a second fan to the front fin stack, it will sit above the RAM modules. Please verify that you have sufficient room inside your case before adding a second fan. For example, if you add a 140mm fan and use RAM modules that are 50mm high, you will need 190mm of clearance, adding a 120mm fan while using 50mm RAM requires 170mm, etc.

Warranty, Support and FAQs

Even with high-grade products and strict quality control, the possibility of defects cannot be eliminated entirely. Therefore, we aim at providing the highest possible level of reliability and convenience by offering a warranty period of 6 years and direct, fast and straightforward RMA service.

Should you encounter any problems with your NH-D15S, please don't hesitate to contact our support team (support@noctua.at).

Please also consult the FAQ section on our website: www.noctua.at/faqs.

Noctua NH-D15S | Installation Manual | LGA2011

Scan this code to display multi-lingual manuals on your mobile phone.

Dear customer,

Congratulations on choosing the Noctua NH-D15S. Tailored to provide superior RAM and PCIe compatibility, the NH-D15S is an asymmetrical single fan version of Noctua's award-winning flagship model NH-D15. I'm confident that you will be able to sense some of the research, attention and care we've put into making this cooler.

Enjoy your NH-D15S!

Yours sincerely,

Roland Mossig, Noctua CEO

This manual will guide you through the installation process of the SecuFirm2™ mounting system step by step.

Prior to installing the cooler, please consult the compatibility list on our website (www.noctua.at/compatibility) and verify that the cooler is fully compatible with your motherboard.

Should you encounter any difficulties, please check the FAQs on our website (www.noctua.at/faqs) and don't hesitate to contact our support team at support@noctua.at.

Noctua cannot be held responsible for any damage or losses caused by compatibility issues.

Multilingual versions of this manual are available on our website: www.noctua.at/manuals

Required mounting parts:

2x NM-IMB2 Mounting Bars

NM-IBT2 Bolts

4x NM-ITS1 Thumbscrews

Step 1

Installing the mounting bars

First screw the NM-IBT2 bolts into the screw threads of the LGA2011 socket frame.

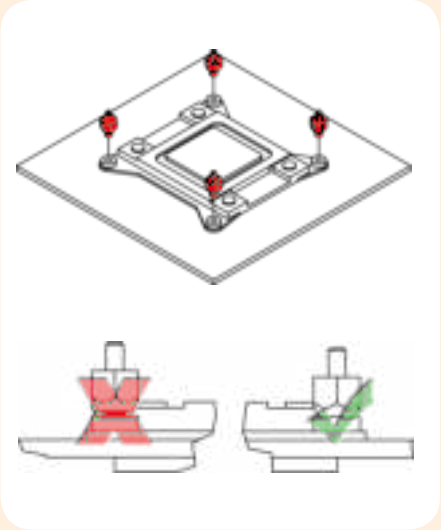

Then put the NM-IMB2 mounting-bars onto the bolts.

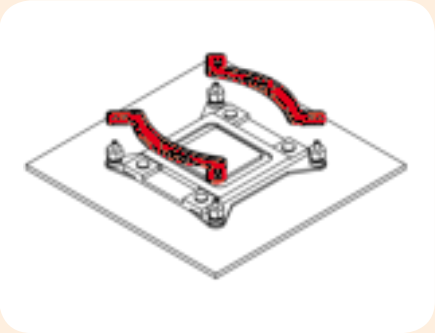

Caution: Choose the alignment of the mounting bars according to the desired final orientation of the cooler:

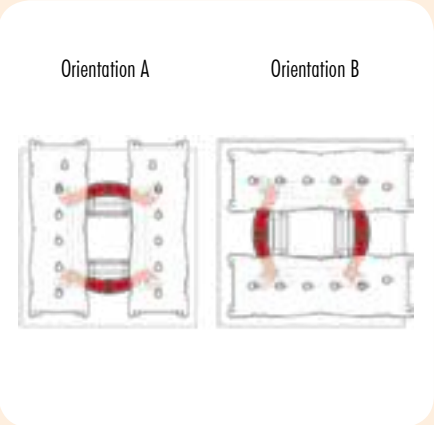

Caution: Make sure that the curved sides of the mounting bars are pointing outwards.

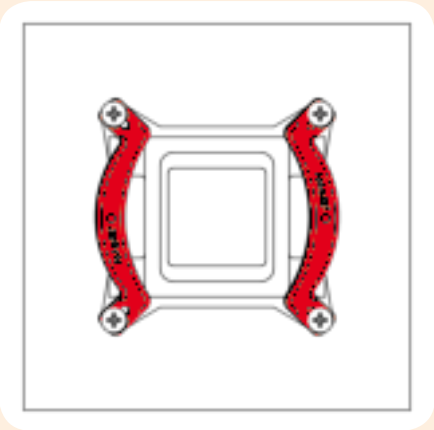

Fix the mounting bars using the 4 thumb screws.

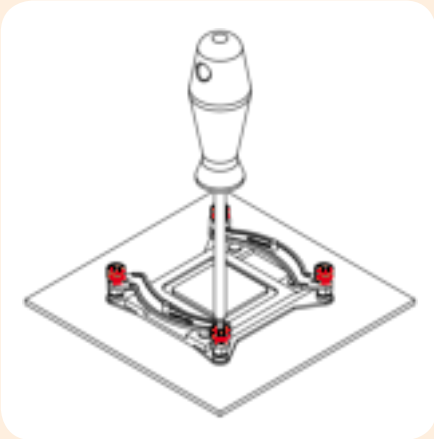

Caution: Gently tighten the screws until they stop, but don't use excessive force.

Step 2

Applying thermal paste

If there are residual traces of thermal paste or thermal pads on your CPU, please clean them off first. Then press a small drop (4-5mm diameter) of NT-H1 onto the centre of the heatspreader.

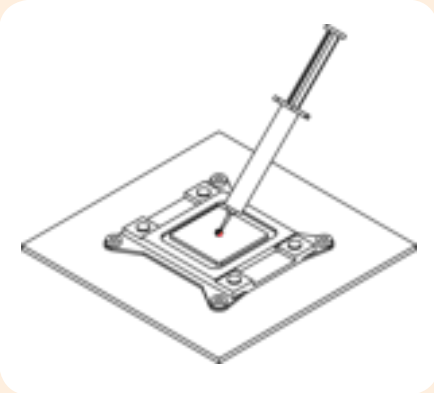

Caution: Applying too much thermal paste will lower the heat conductivity and cooling performance!

Step 3

Fastening the heatsink to the CPU

Caution: Please first take off the fan as well as the protection cover at the bottom side of the heatsink.

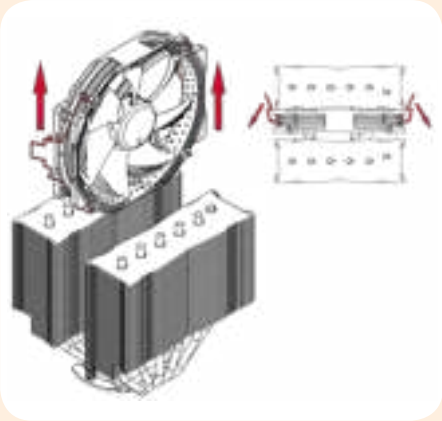

Then put the heatsink onto the CPU and screw it to the screw threads of the mounting bars.

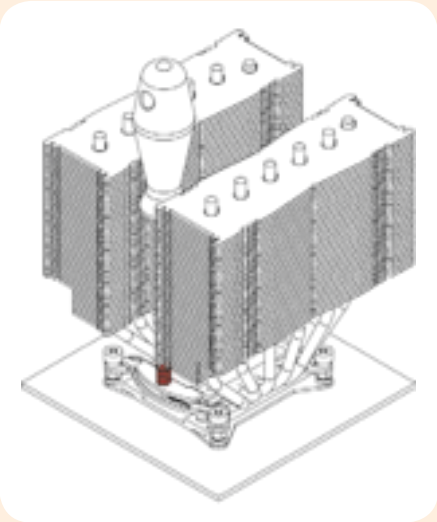

Caution: Tighten the screws until they stop.

Step 4

Fan Setup

Reattach the fan using the supplied steel clips:

1.

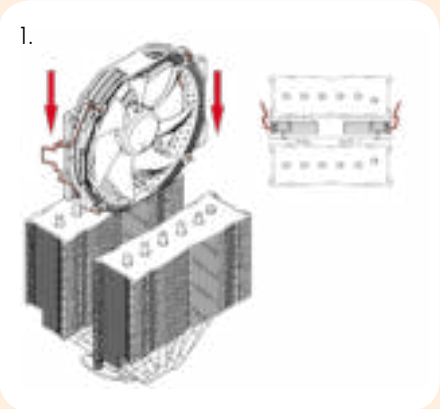

2.

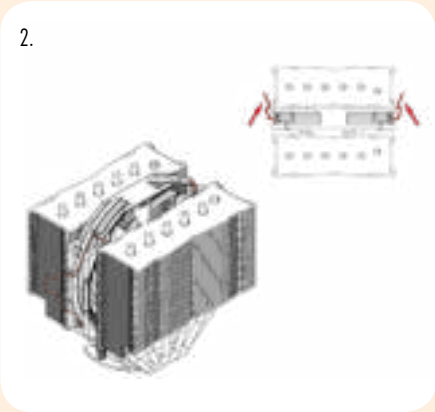

3.

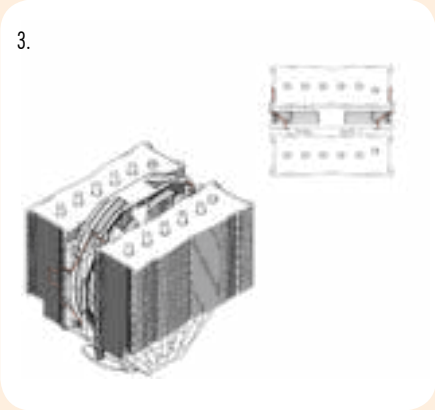

Connect the fan to the mainboard's CPU fan header. Depending on your CPU and the temperature inside the case, you may interconnect the supplied NA-RC7 Low-Noise Adapter (L.N.A.) in order to further reduce the fan's operating noise.

Caution: Never use one adaptor for both fans by putting it before the y-split cable.

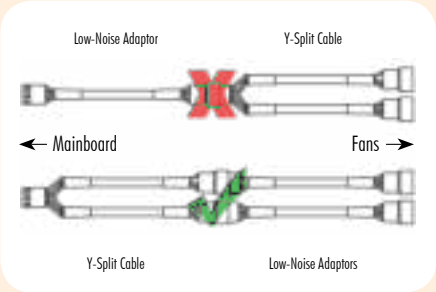

Caution: When using the L.N.A.s, check the temperature of your CPU using appropriate software (e.g. the respective applications of your mainboard manufacturer), in order to evade automatic throttling of the CPU due to the increased temperature. If the cooling performance is insufficient, please increase case ventilation or remove the L.N.A.s.

Adding a second fan

The NH-D15S includes an extra set of fan clips for installing a second fan to the front fin stack in push/pull mode in order to further improve cooling performance. The fan clips support:

- Round frame 140mm fans with 120mm mounting (105mm hole spacing) such as the NF-A15 PWM or the NF-P14r redux models
- Standard 120mm fans (105mm hole spacing) such as the NF-A12, NF-F12 or NF-P12 redux models

Caution:

- It is not possible to install 140mm fans with square frames (124.5mm hole spacing) such as the NF-A14 or NF-P14s redux.
- If you add a second fan to the front fin stack, it will sit above the RAM modules. Please verify that you have sufficient room inside your case before adding a second fan. For example, if you add a 140mm fan and use RAM modules that are 50mm high, you will need 190mm of clearance, adding a 120mm fan while using 50mm RAM requires 170mm, etc.

Warranty, Support and FAQs

Even with high-grade products and strict quality control, the possibility of defects cannot be eliminated entirely. Therefore, we aim at providing the highest possible level of reliability and convenience by offering a warranty period of 6 years and direct, fast and straightforward RMA service.

Should you encounter any problems with your NH-D15S, please don't hesitate to contact our support team (support@noctua.at).

Please also consult the FAQ section on our website: www.noctua.at/faqs.

Dear customer,

Congratulations on choosing the Noctua NH-D15S. Tailored to provide superior RAM and PCIe compatibility, the NH-D15S is an asymmetrical single fan version of Noctua's award-winning flagship model NH-D15. I'm confident that you will be able to sense some of the research, attention and care we've put into making this cooler.

Enjoy your NH-D15S!

Yours sincerely,

Roland Mossig, Noctua CEO

This manual will guide you through the installation process of the SecuFirm2™ mounting system step by step.

Prior to installing the cooler, please consult the compatibility list on our website (www.noctua.at/compatibility) and verify that the cooler is fully compatible with your motherboard.

Should you encounter any difficulties, please check the FAQs on our website (www.noctua.at/faqs) and don't hesitate to contact our support team at support@noctua.at.

Noctua cannot be held responsible for any damage or losses caused by compatibility issues.

Multilingual versions of this manual are available on our website: www.noctua.at/manuals

Required mounting parts:

2x NM-AMB1 Mounting Bars

4x NM-ALS1 Screws

4x NM-APS1 Plastic Spacers

Caution: The SecuFirm2™ mounting system requires a backplate, which is preinstalled on most AMD mainboards. If your mainboard doesn't have a backplate, please contact our support team at support@noctua.at.

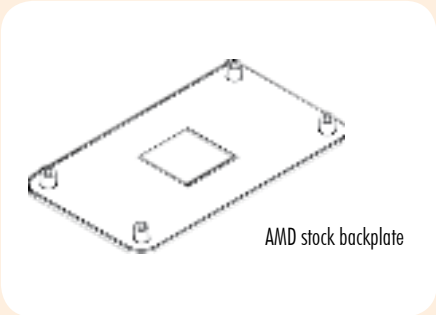

AMD stock backplate

Step 1

Removing the retention module

If your mainboard uses a retention module for CPU cooler installation, please remove it first. The SecuFirm2™ mounting system will install directly to your mainboard's stock backplate on the rear side of the socket.

Step 2

Attaching the mounting bars

First put the plastic spacers onto the screw threads, then fix the mounting bars using the 4 long screws.

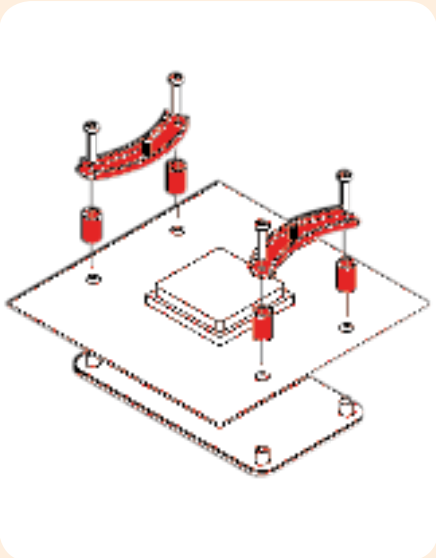

Caution: Make sure that the curved sides of the mounting bars are pointing outwards.

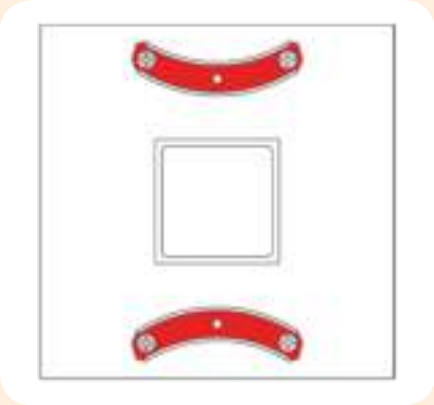

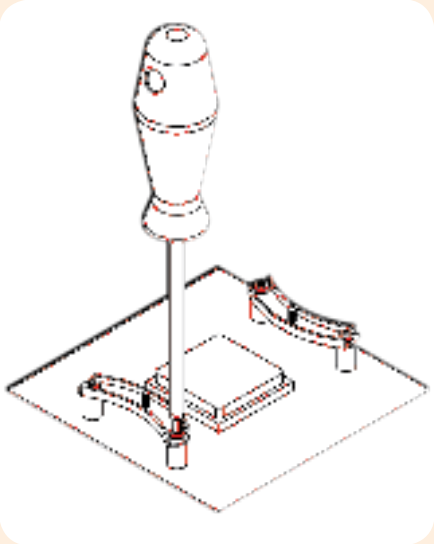

Caution: Tighten the screws until they stop.

Step 3

Applying thermal paste

If there are residual traces of thermal paste or thermal pads on your CPU, please clean them off first. Then press a small drop (4-5mm diameter) of NT-H1 onto the centre of the heatspreader.

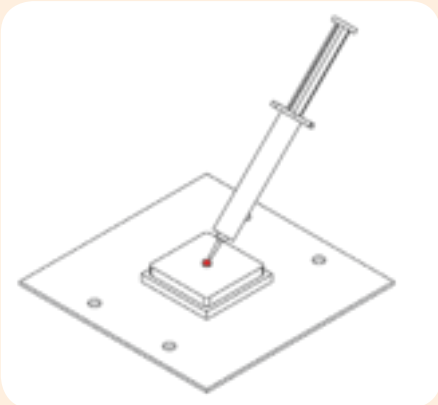

Caution: Applying too much thermal paste will lower the heat conductivity and cooling performance!

Step 4

Fastening the heatsink to the CPU

Caution: Please first take off the fan as well as the protection cover at the bottom side of the heatsink.

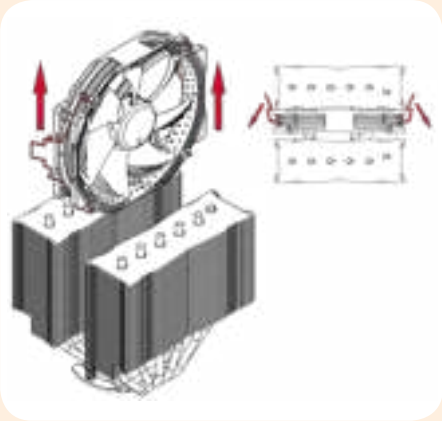

Then put the heatsink onto the CPU and screw it to the screw threads of the mounting bars.

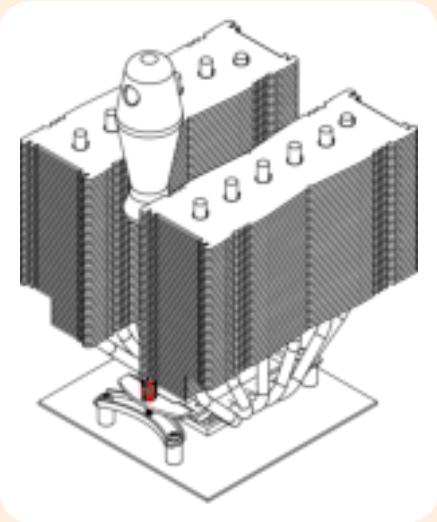

Caution: Tighten the screws until they stop.

Step 5

Fan Setup

Reattach the fan using the supplied steel clips:

1.

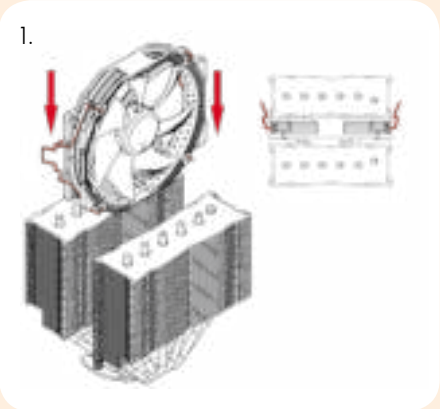

2.

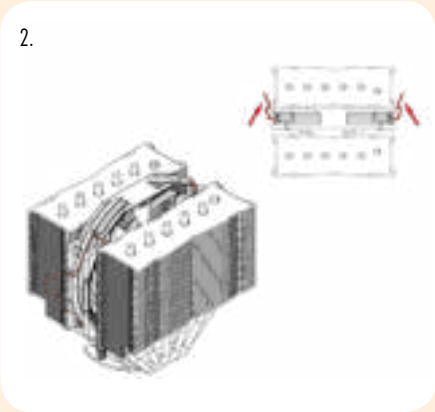

3.

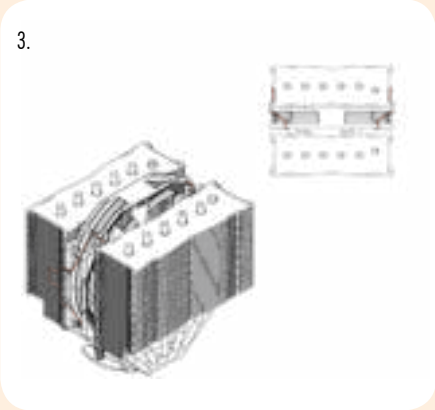

Connect the fan to the mainboard's CPU fan header. Depending on your CPU and the temperature inside the case, you may interconnect the supplied NA-RC7 Low-Noise Adapter (L.N.A.) in order to further reduce the fan's operating noise.

Caution: Never use one adaptor for both fans by putting it before the y-split cable.

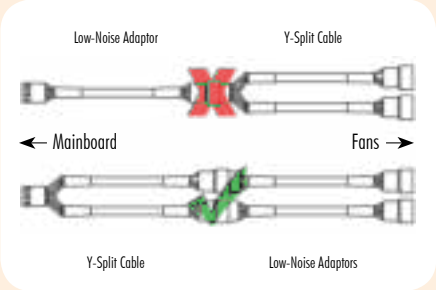

Caution: When using the L.N.A.s, check the temperature of your CPU using appropriate software (e.g. the respective applications of your mainboard manufacturer), in order to evade automatic throttling of the CPU due to the increased temperature. If the cooling performance is insufficient, please increase case ventilation or remove the L.N.A.s.

Adding a second fan

The NH-D15S includes an extra set of fan clips for installing a second fan to the front fin stack in push/pull mode in order to further improve cooling performance. The fan clips support:

- Round frame 140mm fans with 120mm mounting (105mm hole spacing) such as the NF-A15 PWM or the NF-P14r redux models
- Standard 120mm fans (105mm hole spacing) such as the NF-A12, NF-F12 or NF-P12 redux models

Caution:

- It is not possible to install 140mm fans with square frames (124.5mm hole spacing) such as the NF-A14 or NF-P14s redux.
- If you add a second fan to the front fin stack, it will sit above the RAM modules. Please verify that you have sufficient room inside your case before adding a second fan. For example, if you add a 140mm fan and use RAM modules that are 50mm high, you will need 190mm of clearance, adding a 120mm fan while using 50mm RAM requires 170mm, etc.

Warranty, Support and FAQs

Even with high-grade products and strict quality control, the possibility of defects cannot be eliminated entirely. Therefore, we aim at providing the highest possible level of reliability and convenience by offering a warranty period of 6 years and direct, fast and straightforward RMA service.

Should you encounter any problems with your NH-D15S, please don't hesitate to contact our support team (support@noctua.at).

Please also consult the FAQ section on our website: www.noctua.at/faqs.